YANMAR

PARTS CATALOG

0CD10-M69700EN

Last update Apr., 2013

PREFACE

1. This parts catalog is the First edition of 3TNE84T – FL , 3TNE84T – FL2 and 3TNE84T – EFL2 Diesel Engine for FURUKAWA KIKAI.

Pub. No.: 000Y00D6970
Published: Sep .,1999

2. Model name

Engine model	Vehicle		Vehicle Manufacturer
	Products	Model name	
3TNE84T – FL	WHEEL LOADER	FL303	FURUKAWA KIKAI CO.,LTD.
3TNE84T – FL2		FL303-2	
3TNE84T – EFL2			

Directions for the Parts Catalog.

1.This Parts Catalog shows both standard and optional parts.
2.Parts may change without prior notice.
3.The following is an example of the Parts Catalog format.

0CF10-G21601 29. FUEL INJECTION PUMP(W/BOOST)

(A)=4JH-DT
(B)=4JH-DTZ
(C)=4JH-DTZP
(D)=4JH-DTZA
(E)=4JH-DTZY
(F)=

① REF.	② LEV.	PARTS NO.	DESCRIPTION	Q'TY (A)	(B)	(C)	(D)	(E)	(F)	③ I	⑤ R
1	1	729595-51390	FUEL INJECTION PUMP	1	1	1	1	1			1
1-1	1	729595-51391	FUEL INJECTION PUMP	1	1	1	1	1		N	1
	(A=E00185)	(B=E00200)									
3	2	26022-060162	SCREW M 6X 16	9	9	9	9	9			
3-1 ④	2	26022-060162	SCREW M 6X 16	4	4	4	4	4		K	
	(A=E00156)	(B=E00156)	(C=E00156) (D=E00156)	(E=E00156)							
4	2	129470-51040	CAMSHAFT	1	1	1	1	1			
5	2	122710-51050	BEARING, ROLLER	2	2	2	2	2			
6	2	129470-51060	RETAINER	1	1	1	1	1			

Remarks
(1) BOOST COMPEMSATOR TYPE. OPTIONAL PART, TO E00155,(4JH-DT, 4JH-DTZ

①Ref. No.

The Ref. No. listed may not be in accordance with the illustration Ref. No.

(Ex.) Illustration No. 1 List Ref No. 1 (Before change) → 1- 1 (After change)

For interchangeable symbols N, R and K, illustrations for new parts may be abbreviated.

②Lev. (Level)

Level indication
The numbers below indicate the level of relativity towards the main part.
1 ----- Main parts (Assembly parts)
2 ----- Sub component included in " 1 ".
3 ----- Sub component included in " 2 ".
Note) Parts that are not for sale are partially illustrated but not listed.

③Interchangeability Symbol

When a part change takes place, one of the following interchangeability symbols is indicated beside the part.

Symbol	Interchangeability	Contents note
N	Old ← Yes / No → New	New Part is interchangeable for Old Part but Old Part is not interchangeable for New Part.
Q	Old ← No / Yes → New	New Part is not interchangeable for Old Part but Old Part is interchangeable for New Part.
R	Old ← Yes / Yes → New	New/ Old Parts are both interchangeable.
S	Old ← No / No → New	New/ Old Parts are both not interchangeable.
W		Part newly added.
Z		Part discontinued.
F		Not interchangeable by a single part but interchangeable together with related parts.
K		Changes only for used parts quantities.

④Effective Machine No.

When a part changes, the effective Machine No. will be indicated in the (A)-(F) column.

Product Symbol	Product No.	Product Symbol	Product No.
C	Clutch No. Compressor No.	F	Machine No. (Agricultural Equip.)
D	Drive No.	M	Machine No.
E	Engine No.		

Note 1) A date may follow the symbol. (Ex.) 1996.01
Note 2) " XXXXX " and " ZZZZZ " are for parts that could not be predicted or for engine models that could not be identified.
Note 3) (A=E00185) is the E (Engine Serial Number) for the column (A) model (in this case 4JH-DT) after the parts design change.

⑤Remarks

Figures or alphabets (symbols) are entered in the remarks column.
The comments (remarks) on parts that are indicated at the bottom of the illustration are the same symbols as those stated above.

Contents

0CD10-M69700

Fig. No.	Fig. Name
3TNE84T-FL	
1.	CYLINDER BLOCK
2.	GEAR HOUSING
3.	FLYWHEEL HOUSING & OIL SUMP
4.	CYLINDER HEAD & BONNET
5.	SUCTION MANIFOLD & AIR CLEANER
6.	EXHAUST MANIFOLD & SILENCER
7.	TURBIN
8.	CAMSHAFT & DRIVING GEAR
9.	CRANKSHAFT & PISTON
10.	LUB.OIL SYSTEM
11.	LUB.OIL LINE
12.	COOLING WATER SYSTEM
13.	FUEL INJECTION PUMP
14.	GOVERNOR
15.	GOVERNOR
16.	FUEL INJECTION VALVE
17.	FUEL LINE
18.	ENGINE STOP DEVICE
19.	STARTING MOTOR
20.	GENERATOR
21.	GASKET SET

Fig. No.	Fig. Name

Fig.1. CYLINDER BLOCK

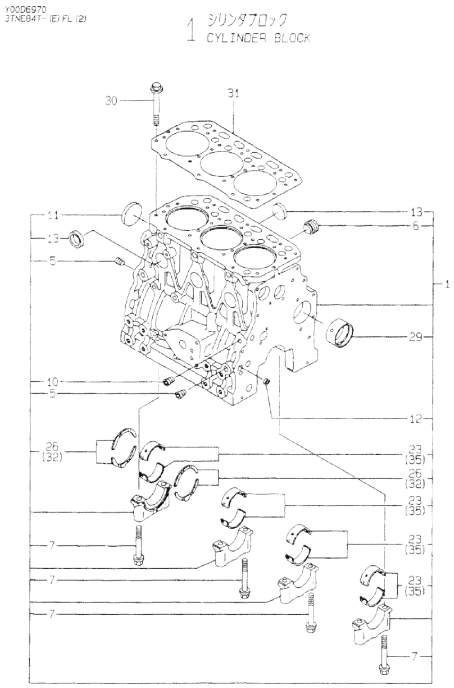

Remarks
(1) OVER-SIZE(O.S=0.25)PART.
(2) UNDER-SIZE(U.S=0.25)PART.
(3) REPAIR PART.

(A)=3TNE84T-FL (D)=
(B)=3TNE84T-FL2 (E)=
(C)=3TNE84T-EFL2 (F)=

No.	Lev.	Parts No.	Description	Q'ty (A)	(B)	(C)	(D)	(E)	(F)	I	R
1	1	729012-01560	BLOCK ASSY, CYLINDER	1	1	1					
5	2	124160-01910	PLUG, PT1/4	3	3	3					
6	2	171051-01921	PLUG, NPTF1	1	1	1					
7	2	129150-02020	BOLT, METAL CAP	8	8	8					
10	2	23871-010000	PLUG, R01	1	1						
10-1	2	23876-010000	PLUG, R01	1	1	1				N	
	(A=EXXX)		(B=EXXX)								
11	2	27231-500000	PLUG 50	1	1	1					
12	2	27241-120000	PLUG, 12	2	2	2					
13	2	27241-300000	PLUG 30	6	6	6					
23	2	129001-02930	BEARING, MAIN	4	4	4				W	3
	(A=FROM 1ST)										
26	2	129150-02930	BEARING, THRUST	2	2	2					
29	2	129795-02411	BUSH, CAMSHAFT	1	1	1					
30	1	129150-01200	BOLT, HEAD	14	14	14					
31	1	129002-01331	GASKET, HEAD	1	1	1					
32	1	129150-02940	BEARING, THRUST 0.25	2	2	2					1
35	1	129150-02870	BEARING, 0.25 US	4	4	4					2

N:Old ←Yes/No→ New. Q:Old ←No/Yes→ New. R:Old ←Yes/Yes→ New. S:Old ←No/No→ New. W:Add. Z:Discontinued. F:Interchangeable by set. K:Q'ty Change

Copyright (C) YANMAR GLOBAL CS CO., LTD. All RightsReserved.

Fig.2. GEAR HOUSING

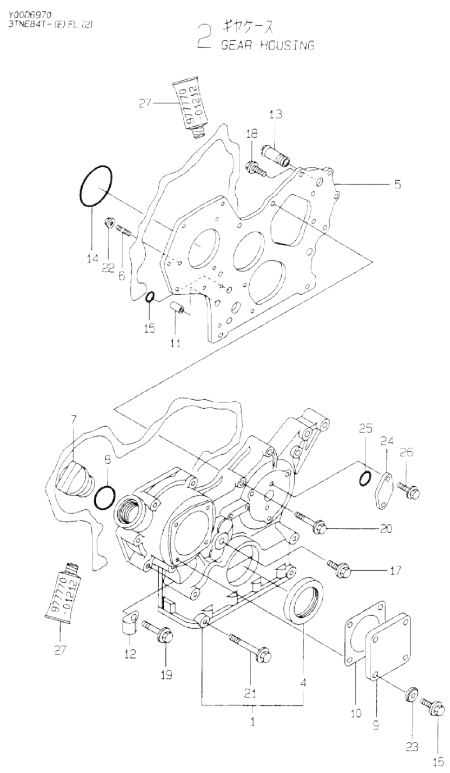

(A)=3TNE84T-FL
(B)=3TNE84T-FL2
(C)=3TNE84T-EFL2
(D)=
(E)=
(F)=

No.	Lev.	Parts No.	Description	Q'ty (A)	(B)	(C)	(D)	(E)	(F)	I	R
1	1	719810-01500	CASE ASSY, GEAR	1	1	1					
4	2	129795-01800	SEAL, OIL	1	1	1					
5	1	129103-01530	FLANGE, GEAR CASE	1	1	1					
6	1	121450-01560	STUD, M8X22	3	3	3					
7	1	124160-01751	COVER, FILLER	1	1	1					
8	1	24311-000320	O-RING, 1AP32.0	1	1	1					
9	1	124240-01871	COVER	1	1	1					
10	1	124240-01883	GASKET	1	1	1					
11	1	129795-01950	PIPE, KNOCK L=18	2	2	2					
12	1	129150-03100	RETAINER, PIPE	1	1	1					
13	1	129122-44480	JOINT	1	1	1					
14	1	121850-51960	O-RING	1	1	1					
15	1	24311-000160	O-RING, 1AP16.0	2	2	2					
16	1	26106-080122	BOLT, M8X 12 PLATED	4	4	4					
17	1	26106-080162	BOLT, M8X 16 PLATED	1	1	1					
18	1	26106-080202	BOLT, M8X 20 PLATED	2	2	2					
19	1	26106-080452	BOLT, M8X 45 PLATED	6	6	6					
20	1	26106-080552	BOLT, M8X 55 PLATED	3	3	3					
21	1	26106-080852	BOLT, M8X 85 PLATED	4	4						
21-1	1	129001-91840	BOLT, M8X85	4	4	4				N	
	(A=E31714)		(B=E37493)								
22	1	26366-080002	NUT, M8	3	3	3					
23	1	22190-080002	WASHER, SEAL 6	4	4	4					
24	1	121023-01550	COVER	1	1	1					
25	1	24341-000240	O-RING, 1AS24.0	1	1	1					
26	1	26106-060122	BOLT, M6X 12 PLATED	2							
26-1	1	26106-060162	BOLT, M6X 16 PLATED	2	2	2				N	
	(A=EXXX)										
27	1	977770-01212	GASKET, LIQUID	1	1	1				W	1
	(A=EXXX)										

Remarks
(1) OPTIONAL PART.

N:Old $\xleftarrow[\text{No}]{\text{Yes}}$ New. Q:Old $\xleftarrow[\text{Yes}]{\text{No}}$ New, R:Old $\xleftarrow[\text{Yes}]{\text{Yes}}$ New. S:Old $\xleftarrow[\text{No}]{\text{No}}$ New. W:Add. Z:Discontinued. F:Interchangeable by set. K:Q`ty Change

Copyright (C) YANMAR GLOBAL CS CO., LTD. All RightsReserved.

Fig.3. FLYWHEEL HOUSING & OIL SUMP

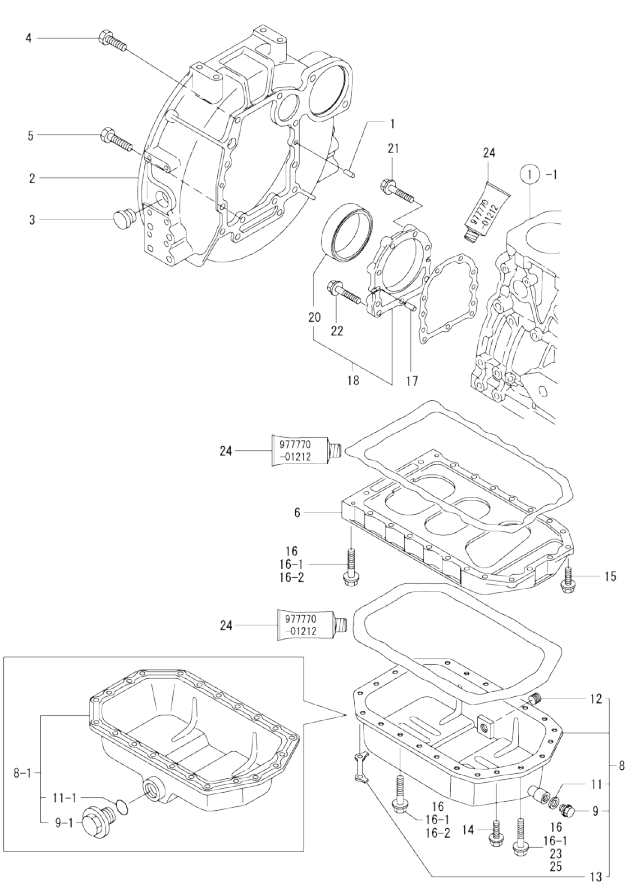

Remarks
(1) OPTIONAL PART.

(A)=3TNE84T-FL (D)=
(B)=3TNE84T-FL2 (E)=
(C)=3TNE84T-EFL2 (F)=

No.	Lev.	Parts No.	Description	Q'ty (A)	(B)	(C)	(D)	(E)	(F)	I	R
1	1	129100-01580	PIN, M8X16	2	2	2					
2	1	171440-01600	HOUSING, FLYWHEEL	1	1	1					
3	1	119620-01750	CAP	1	1	1					
4	1	26206-100252	BOLT, M10X 25 PLATED	6	6	6					
5	1	26206-100302	BOLT, M10X 30 PLATED	4	4	4					
6	1	129100-01730	SPACER, OIL SUMP	1	1	1					
8	1	129112-01770	SUMP ASSY, OIL	1	1						
8-1	1	129175-01770	SUMP ASSY, OIL		1	1				S	
		(B=E40486)									
9	2	105425-01690	PLUG, 16	1	1						
9-1	2	171301-01640	PLUG, 22		1	1				S	
		(B=E40486)									
11	2	22190-160002	WASHER, SEAL 16	1	1						
11-1	2	24341-000250	O-RING, 1AS25.0		1	1				S	
		(B=E40486)									
12	2	129137-01640	PLUG, M22	1	1					Z	
		(B=E40486)									
13	2	129100-01790	RETAINER	2						Z	
	(A=E00467)										
14	1	26106-080162	BOLT, M8X 16 PLATED	4	4	4					
15	1	26106-080252	BOLT, M8X 25 PLATED	2	2	2					
16	1	26106-080452	BOLT, M8X 45 PLATED	16							
16-1	1	26106-080452	BOLT, M8X 45 PLATED	20	20	20				K	
	(A=E00467)										
16-2	1	26106-080452	BOLT, M8X 45 PLATED	16	16	16				K	
	(A=FROM 1ST)	(B=FROM 1ST)	(C=FROM 1ST)								
17	1	129100-01580	PIN, M8X16	2	2	2					
18	1	129100-01640	CASE ASSY, OIL SEAL	1	1	1					
20	2	129795-01780	SEAL, OIL	1	1	1					
21	1	26106-080302	BOLT, M8X 30 PLATED	6							
21-1	1	129486-01670	BOLT, M8X30	6	6	6				R	
	(A=E15623)										
22	1	26106-080352	BOLT, M8X 35 PLATED	3	3	3					
23	1	26106-080502	BOLT, M8X 50 PLATED	4						Z	
	(A=E00467)										
24	1	977770-01212	GASKET, LIQUID	1	1	1				W	1
	(A=EXXX)										
25	1	26106-080502	BOLT, M8X 50 PLATED	4	4	4				W	
	(A=FROM 1ST)	(B=FROM 1ST)	(C=FROM 1ST)								

N:Old ←Yes/No→ New. Q:Old ←No/Yes→ New. R:Old ←Yes/Yes→ New. S:Old ←No/No→ New. W:Add. Z:Discontinued. F:Interchangeable by set. K:Q'ty Change

Copyright (C) YANMAR GLOBAL CS CO., LTD. All RightsReserved.

Fig.4. CYLINDER HEAD & BONNET

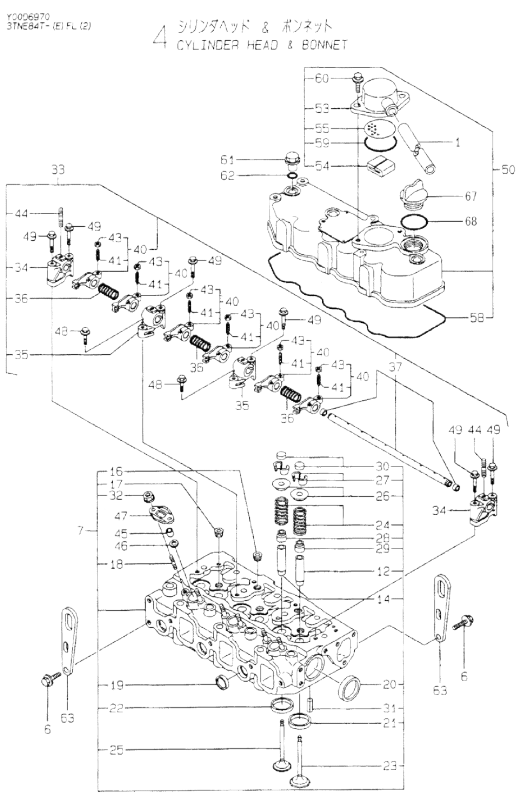

(A)=3TNE84T-FL
(B)=3TNE84T-FL2
(C)=3TNE84T-EFL2
(D)=
(E)=
(F)=

No.	Lev.	Parts No.	Description	Q'ty (A)	(B)	(C)	(D)	(E)	(F)	I	R
1	1	171350-03090	PIPE , BREATHER 900	1	1	1					
6	1	26106-080142	BOLT, M8X 14 PLATED	4	4	4					
7	1	729202-11710	HEAD ASSY, CYLINDER	1	1	1					
12	2	120130-11860	GUIDE, VALVE	3	3	3					1
14	2	129150-11810	GUIDE, VALVE	3	3	3					1
16	2	121850-11860	PLUG, PT1/4	2							
16-1	2	23871-020000	PLUG, R02	2	2					N	
	(A=E09758)										
16-2	2	23876-020000	PLUG, R02	2	2	2				N	
	(A=EXXX)	(B=EXXX)									
17	2	23871-030000	PLUG, R03	3	3						
17-1	2	23876-030000	PLUG, R03	3	3	3				N	
	(A=EXXX)	(B=EXXX)									
18	2	26216-060202	STUD, M6X 20	6	6	6					
19	2	27241-220000	PLUG, 22	3	3	3					
20	2	27241-400000	PLUG, 40	2	2	2					
21	2	129470-11080	SEAT, INTAKE VALVE	3	3	3					
22	2	129470-11090	SEAT, EXHAUST VALVE	3	3	3					
23	2	129100-11100	VALVE, INTAKE	3	3	3					
24	2	129795-11120	SPRING, VALVE	6	6	6					
25	2	129100-11130	VALVE, EXHAUST	3	3	3					
26	2	129795-11180	RETAINER, SPRING	6	6	6					
27	2	103338-11190	COTTER	6							
27-1	2	27310-080001	COTTER, 8	6	6	6				R	
	(A=EXXXXX)										
28	2	121400-11340	SEAL, VALVE STEM	3	3	3					
29	2	124460-11340	SEAL, VALVE STEM	3	3	3					
30	2	129150-11370	CAP, VALVE	6	6	6					
31	2	22351-060012	PIN, SPRING 6.0X12	2	2	2					
32	2	26366-060002	NUT, M6	6	6	6					
33	1	129155-11241	SHAFT ASSY, ROCKER	1	1	1					
34	2	129155-11260	SUPPORT, ROCKER ARM	2	2	2					
35	2	129155-11270	SUPPORT, ROCKER ARM	2	2	2					
36	2	129150-11280	SPRING	3	3	3					
37	2	129150-11290	SHAFT, ROCKER ARM	1	1	1					
40	2	729402-11650	ARM ASSY, ROCKER	6	6	6					
41	3	129150-11230	SCREW, VALVE ADJUST	6	6	6					
43	3	129150-11750	NUT, M8	6	6	6					
44	2	26226-080182	STUD, M8X 18	3	3	3					
45	1	119625-11870	PROTECTOR, NOZZLE	3	3	3					
46	1	119625-11880	SEAT, NOZZLE	3	3	3					
47	1	119625-11900	RETAINER, NOZZLE	3	3	3					
48	1	26106-080252	BOLT, M8X 25 PLATED	2	2	2					
49	1	26106-080502	BOLT, M8X 50 PLATED	6	6	6					
50	1	129100-11350	BONNET ASSY, HEAD	1	1	1					
53	2	129150-03020	COVER, BREATHER	1	1	1					
54	2	129150-03070	BAFFLE, BREATHER	1	1	1					
55	2	129150-03080	PLATE, BAFFLE	1	1	1					
58	2	129150-11310	GASKET, BONNET	1	1	1					
59	2	24341-000500	O-RING, 1AS50.0	1	1	1					
60	2	26106-080162	BOLT, M8X 16 PLATED	2	2	2					

Remarks
(1) REPAIR PART.

N:Old ←Yes/No→ New. Q:Old ←No/Yes→ New. R:Old ←Yes/Yes→ New. S:Old ←No/No→ New. W:Add. Z:Discontinued. F:Interchangeable by set. K:Q'ty Change

++ CONTINUE ++

Copyright (C) YANMAR GLOBAL CS CO., LTD. All RightsReserved.

Fig.4. CYLINDER HEAD & BONNET

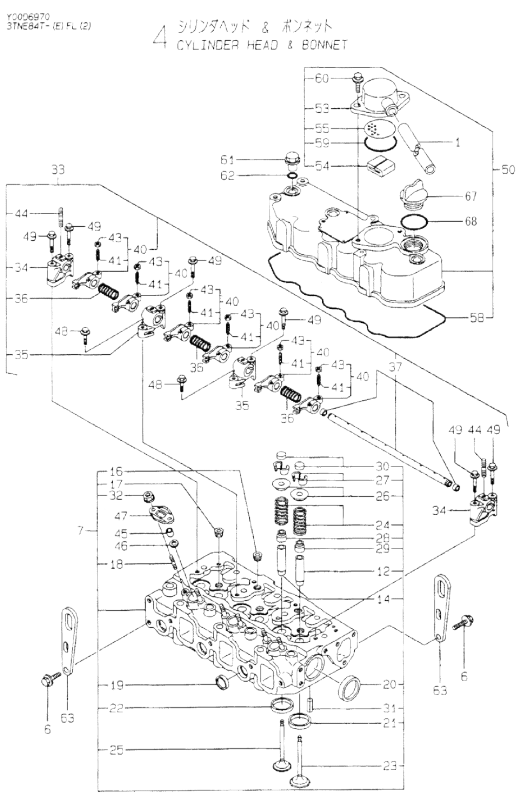

Remarks
(1) REPAIR PART.

(A)=3TNE84T-FL
(B)=3TNE84T-FL2
(C)=3TNE84T-EFL2
(D)=
(E)=
(F)=

No.	Lev.	Parts No.	Description	Q'ty (A)	(B)	(C)	(D)	(E)	(F)	I	R
61	1	124160-11360	KNOB	3	3	3					
62	1	24311-000120	O-RING, 1AP12.0	3	3	3					
63	1	124736-07900	LIFTER	2	2	2					
67	1	124160-01751	COVER, FILLER	1	1	1					
68	1	24311-000320	O-RING, 1AP32.0	1	1	1					

N:Old ←Yes/No→ New. Q:Old ←No/Yes→ New, R:Old ←Yes/Yes→ New. S:Old ←No/No→ New. W:Add. Z:Discontinued. F:Interchangeable by set. K:Q'ty Change

Copyright (C) YANMAR GLOBAL CS CO., LTD. All RightsReserved.

Fig.5. SUCTION MANIFOLD & AIR CLEANER

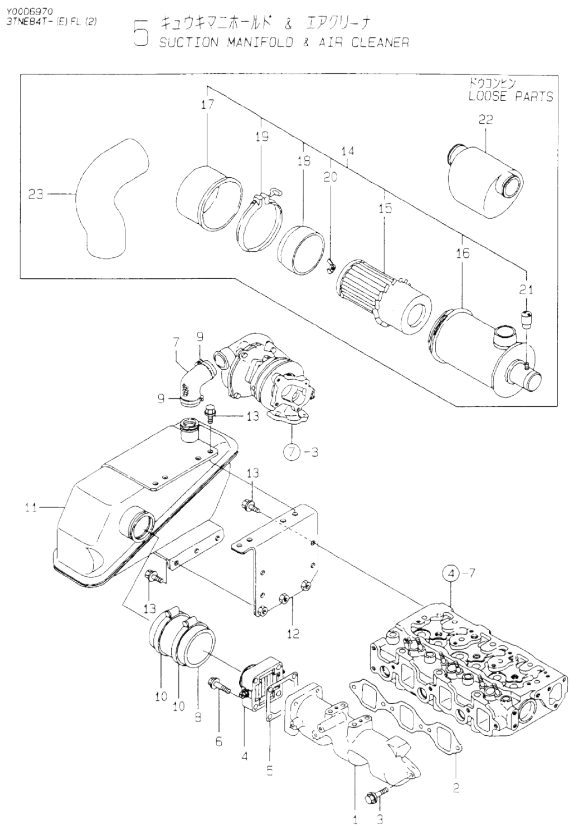

(A)=3TNE84T-FL
(B)=3TNE84T-FL2
(C)=3TNE84T-EFL2
(D)=
(E)=
(F)=

No.	Lev.	Parts No.	Description	Q'ty (A)	(B)	(C)	(D)	(E)	(F)	I	R
1	1	129122-12100	MANIFOLD, AIR INTAKE	1	1	1					
2	1	129150-12111	GASKET, MANIFOLD	1	1	1					
3	1	26106-080252	BOLT, M8X 25 PLATED	4	4	4					
4	1	129120-77501	HEATER	1	1	1					
5	1	129150-77511	GASKET	1	1	1					
6	1	26106-080352	BOLT, M8X 35 PLATED	4	4	4					
7	1	129139-12050	HOSE, WATER	1	1	1					
8	1	129122-12060	HOSE	1	1	1					
9	1	23000-041000	CLAMP, 41	2	2	2					
10	1	23000-060000	CLAMP, 60	2	2	2					
11	1	129139-12200	TANK, SURGE	1	1	1					
12	1	129122-12211	BRACKET	1	1	1					
13	1	26106-080162	BOLT, M8X 16 PLATED	11	11	11					
14	1	129135-12500	CLEANER ASSY, AIR	1	1	1					
15	2	121420-12511	ELEMENT	1	1	1					
16	2	129135-12520	BODY ASSY	1	1	1					
17	2	121420-12530	CAP, AIR CLEANER	1	1	1					
18	2	121420-12540	SCARF, BAFFLE	1	1	1					
19	2	121420-12550	CLAMP ASSY	1	1	1					
20	2	121420-12561	NUT, WING	1	1	1					
21	2	171061-12800	INDICATOR	1	1	1					
22	1	121855-12060	SILENCER ASSY	1	1					Z	
		(B=E40486)									
23	1	121505-12210	HOSE, AIR CLEANER		1	1					

N:Old ◄Yes/No► New. Q:Old ◄No/Yes► New. R:Old ◄Yes/Yes► New. S:Old ◄No/No► New. W:Add. Z:Discontinued. F:Interchangeable by set. K:Q'ty Change

Copyright (C) YANMAR GLOBAL CS CO., LTD. All RightsReserved.

Fig.6. EXHAUST MANIFOLD & SILENCER

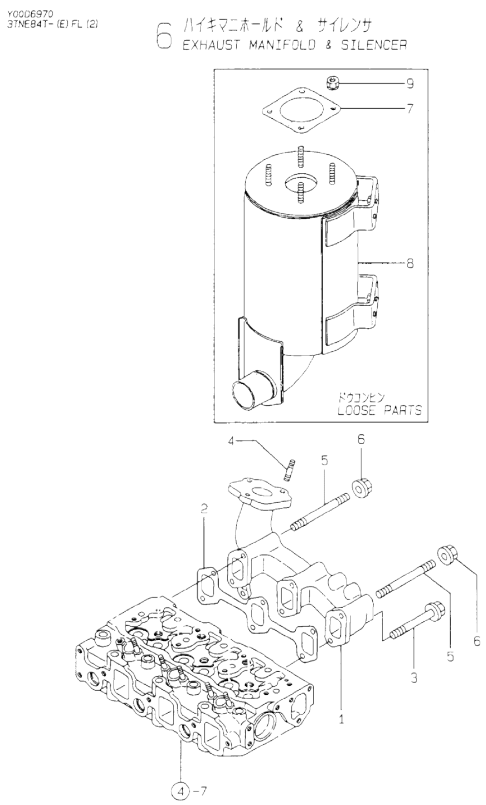

(A)=3TNE84T-FL
(B)=3TNE84T-FL2
(C)=3TNE84T-EFL2
(D)=
(E)=
(F)=

No.	Lev.	Parts No.	Description	Q'ty (A)	(B)	(C)	(D)	(E)	(F)	I	R
1	1	129139-13100	MANIFOLD, EXHAUST	1	1	1					
2	1	129150-13110	GASKET	1	1	1					
3	1	26106-080802	BOLT, M8X 80 PLATED	4	4	4					
4	1	26216-080222	STUD, M8X 22	3	3						
4-1	1	119131-18320	STUD, M8X22	3	3	3				N	
	(A=E31714)	(B=E37139)									
5	1	26216-080802	STUD, M8X 80	2	2	2					
6	1	194990-22050	NUT, M8	2	2						
6-1	1	26366-080002	NUT, M8	2	2	2				N	
	(A=E31714)	(B=E38414)									
7	1	129400-13201	GASKET, SILENCER	2	2	2					
8	1	129213-13510	SILENCER	1	1	1					
9	1	194990-22050	NUT, M8	8	8	8				W	
	(A=EXXX)										

N:Old ◄Yes/No► New. Q:Old ◄No/Yes► New. R:Old ◄Yes/Yes► New. S:Old ◄No/No► New. W:Add. Z:Discontinued. F:Interchangeable by set. K:Q'ty Change

Copyright (C) YANMAR GLOBAL CS CO., LTD. All RightsReserved.

Fig.7. TURBIN

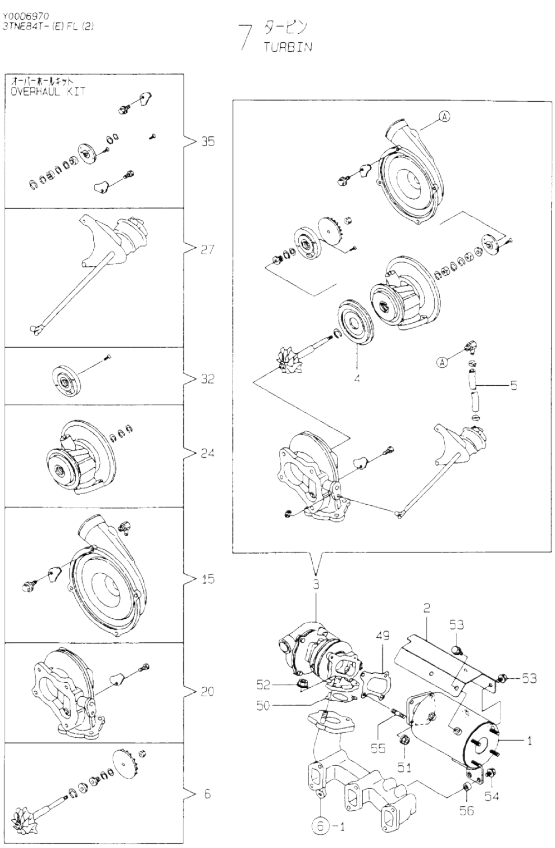

(A)=3TNE84T-FL
(B)=3TNE84T-FL2
(C)=3TNE84T-EFL2
(D)=
(E)=
(F)=

No.	Lev.	Parts No.	Description	Q'ty (A)	(B)	(C)	(D)	(E)	(F)	I	R
1	1	129012-13300	RESONATOR	1	1	1					
2	1	129012-13410	COVER, RESONATOR	1	1	1					
3	1	129137-18010	TURBINE, RHB31W/G	1	1	1					
4	2	129403-18720	PROTECTOR, HEAT	1	1	1					
5	2	129403-18750	HOSE	1	1	1					
6	2	129403-18770	ROTOR ASSY, TURBO	1	1	1					
15	2	129403-18780	HOUSING ASSY, BLOWER	1	1	1					
20	2	XNB139825	HOUSING ASSY, TURBO	1	1	1					
24	2	129403-18800	HOUSING ASSY,BEARING	1	1	1					
27	2	XNB139826	CONTROL ASSY	1	1	1					
32	2	XNB139815	SEAL PLATE ASSY	1	1	1					
35	2	XNB139827	OVERHAUL KIT	1	1	1					
49	1	129403-18091	GASKET	1	1	1					
50	1	129477-18101	GASKET	1	1	1					
51	1	194990-22050	NUT, M8	4	4	4					
52	1	194990-22050	NUT, M8	3	3	3					
53	1	26106-080102	BOLT, M8X 10 PLATED	4	4	4					
54	1	26014-080252	BOLT, M8X 25	2	2	2					
55	1	26216-080222	STUD, M8X 22	4	4						
55-1	1	129418-18320	STUD, M8X20	4	4	4					R
	(A=E31714)	(B=E38414)									
56	1	106500-44810	SPACER	2	2	2					

N:Old ←Yes/No→ New. Q:Old ←No/Yes→ New. R:Old ←Yes/Yes→ New. S:Old ←No/No→ New. W:Add. Z:Discontinued. F:Interchangeable by set. K:Q'ty Change

Copyright (C) YANMAR GLOBAL CS CO., LTD. All RightsReserved.

Fig.8. CAMSHAFT & DRIVING GEAR

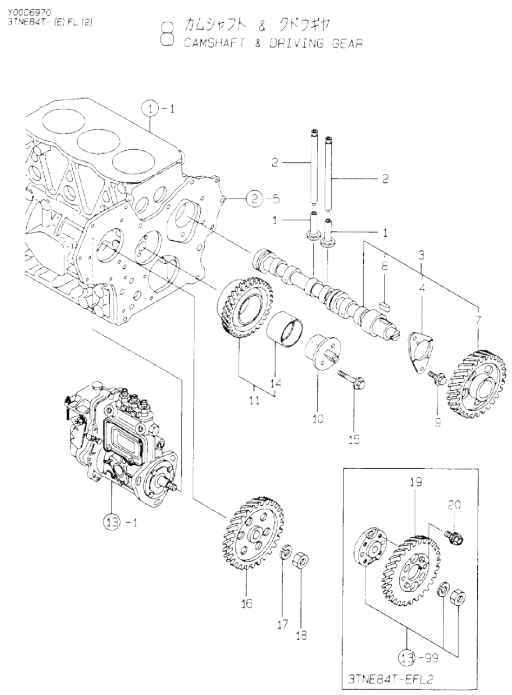

(A)=3TNE84T-FL
(B)=3TNE84T-FL2
(C)=3TNE84T-EFL2
(D)=
(E)=
(F)=

No.	Lev.	Parts No.	Description	Q'ty (A)	(B)	(C)	(D)	(E)	(F)	I	R
1	1	129150-14200	TAPPET	6	6	6					
2	1	129150-14400	ROD, PUSH L=178	6	6	6					
3	1	129129-14580	CAMSHAFT ASSY	1	1	1					
4	2	129150-02450	BEARING, THRUST	1	1	1					
7	2	129150-14101	GEAR, CAMSHAFT	1	1	1					
8	2	22512-070140	KEY, 7X 14	1	1	1					
9	1	26106-080162	BOLT, M8X 16 PLATED	2							
9-1	1	26106-080142	BOLT, M8X 14 PLATED	2	2	2				N	
	(A=E14261)										
10	1	129100-25061	SHAFT, IDLE	1	1	1					
11	1	129150-25101	GEAR ASSY, IDLE	1	1	1					
14	2	129150-25920	BUSH, IDLE GEAR	1	1	1					1
15	1	26106-080452	BOLT, M8X 45 PLATED	2	2	2					
16	1	129150-25900	GEAR, PUMP	1	1						
17	1	22217-120000	WASHER, SPRING 12	1	1						
18	1	26716-120002	NUT, M12	1	1						
19	1	129150-25931	GEAR, PUMP			1					
20	1	129150-25301	BOLT			4					

Remarks
(1) REPAIR PART.

N:Old ←Yes/No→ New. Q:Old ←No/Yes→ New, R:Old ←Yes/Yes→ New. S:Old ←No/No→ New. W:Add. Z:Discontinued. F:Interchangeable by set. K:Q'ty Change

Copyright (C) YANMAR GLOBAL CS CO., LTD. All RightsReserved.

Fig.9. CRANKSHAFT & PISTON

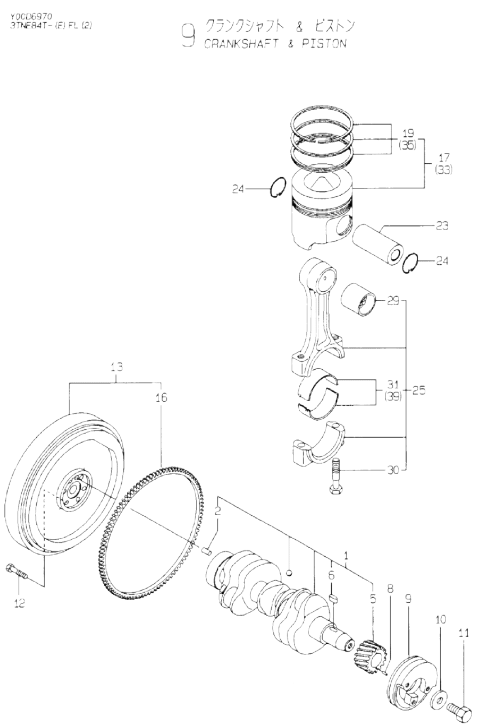

Remarks
(1) REPAIR PART.
(2) OVER-SIZE(O.S=0.25)PART.
(3) UNDER-SIZE(U.S=0.25)PART.

(A)=3TNE84T-FL
(B)=3TNE84T-FL2
(C)=3TNE84T-EFL2
(D)=
(E)=
(F)=

No.	Lev.	Parts No.	Description	Q'ty (A)	(B)	(C)	(D)	(E)	(F)	I	R
1	1	129001-21000	CRANKSHAFT ASSY	1	1	1					
2	2	129100-01580	PIN, M8X16	1	1	1					
5	2	129150-21200	GEAR, CRANKSHAFT	1	1	1					
6	2	22512-070140	KEY, 7X 14	1	1	1					
8	1	22351-040010	PIN, SPRING 4.0X10	1	1	1					
9	1	171340-21650	V-PULLEY	1	1	1					
10	1	129795-21661	WASHER	1	1	1					
11	1	121850-21680	BOLT	1	1	1					
12	1	121111-21501	BOLT, FLYWHEEL	6	6	6					
13	1	171350-21590	FLYWHEEL ASSY	1	1	1					
16	2	124550-21600	GEAR, RING	1	1	1					
17	1	129002-22090	PISTON ASSY	3	3	3					
19	2	129002-22510	RING SET, PISTON	3	3	3					
23	1	129202-22300	PIN, PISTON D26 L70	3	3	3					
24	1	22252-000260	RING, 26	6	6	6					
25	1	729402-23100	ROD ASSY, CONNECTING	3	3	3					
29	2	129100-23910	BEARING, PISTON PIN	3	3	3					1
30	2	121550-23200	BOLT, CONNECTING ROD	6	6	6					
31	2	129150-23600	BEARING, CRANK PIN	3	3	3					
33	1	129002-22910	PISTON ASSY, 0.25 OS	3	3	3					2
35	2	129002-22960	RING SET, 0.25 OS	3	3	3					2
39	1	129150-23610	BEARING, 0.25 US	3	3	3					3

N:Old ←Yes/No→ New. Q:Old ←No/Yes→ New. R:Old ←Yes/Yes→ New. S:Old ←No/No→ New. W:Add. Z:Discontinued. F:Interchangeable by set. K:Q'ty Change

Copyright (C) YANMAR GLOBAL CS CO., LTD. All RightsReserved.

Fig.10. LUB.OIL SYSTEM

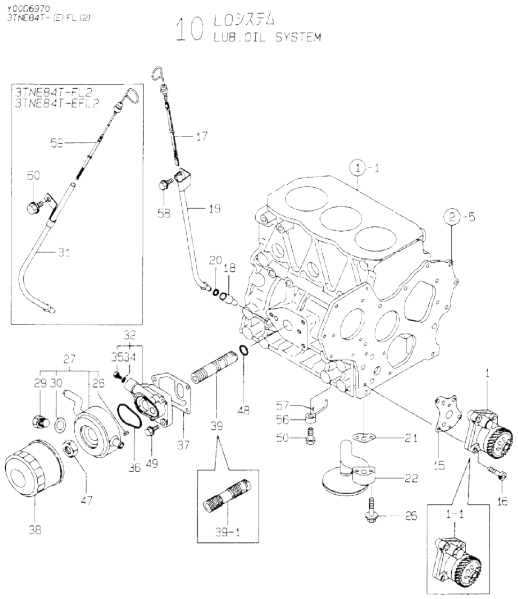

(A)=3TNE84T-FL
(B)=3TNE84T-FL2
(C)=3TNE84T-EFL2
(D)=
(E)=
(F)=

No.	Lev.	Parts No.	Description	Q'ty (A)	(B)	(C)	(D)	(E)	(F)	I	R
1	1	129553-32000	PUMP ASSY, OIL	1							
1-1	1	129418-32000	PUMP ASSY, OIL	1	1	1				S	1
	(A=E03564)										
15	1	129150-32020	GASKET, PUMP	1	1	1					
16	1	26450-060252	BOLT, M6X 25	4	4	4					
17	1	129128-34800	DIPSTICK, OIL	1							
18	1	119260-34810	GUIDE, DIPSTICK	1	1	1					
19	1	129136-34820	GUIDE, DIPSTICK	1							
20	1	24311-240100	O-RING, 1AP10A	1	1	1					
21	1	129150-35041	GASKET	1	1	1					
22	1	129135-35090	PIPE ASSY, OIL INLET	1	1	1					
26	1	26106-080352	BOLT, M8X 35 PLATED	2	2	2					
27	1	129012-33000	COOLER ASSY, OIL	1	1	1					
28	2	129120-33040	PIN	2	2	2					
29	2	129120-33051	PLUG, DRAIN	1	1	1					
30	2	129120-33060	GASKET	1	1	1					
31	1	129114-34810	GUIDE, DIPSTICK		1	1					
32	1	129120-35001	BRACKET ASSY	1	1	1					
34	2	23414-100000	GASKET, 10X1.0	1	1	1					
35	2	23881-100002	PLUG, 10	1	1	1					
36	1	129120-35110	GASKET	1	1	1					
37	1	129120-35121	GASKET	1	1	1					
38	1	129150-35151	FILTER, D80XL80	1	1	1					
39	1	129030-35300	VALVE ASSY, CONTROL	1							
39-1	1	129407-35300	BOLT, FILTER	1	1	1				S	1
	(A=E03564)										
47	1	129150-35350	NUT	1	1	1					
48	1	24311-000160	O-RING, 1AP16.0	1	1	1					
49	1	26106-080252	BOLT, M8X 25 PLATED	3	3	3					
50	1	129792-39410	VALVE ASSY, CHECK	3	3	3					
56	1	129553-39650	NOZZLE	3	3	3					
57	1	22351-030010	PIN, SPRING 3.0X10	3	3	3					
58	1	26106-080252	BOLT, M8X 25 PLATED	1							
59	1	129114-34820	DIPSTICK, OIL		1	1					
60	1	26106-080162	BOLT, M8X 16 PLATED		1	1					

Remarks
(1) REF.NO.1-1 & 39-1 INTERCHANGEABLE BY SET.

N:Old ←Yes/No→ New. Q:Old ←No/Yes→ New. R:Old ←Yes/Yes→ New. S:Old ←No/No→ New. W:Add. Z:Discontinued. F:Interchangeable by set. K:Q'ty Change

Copyright (C) YANMAR GLOBAL CS CO., LTD. All RightsReserved.

Fig.11. LUB.OIL LINE

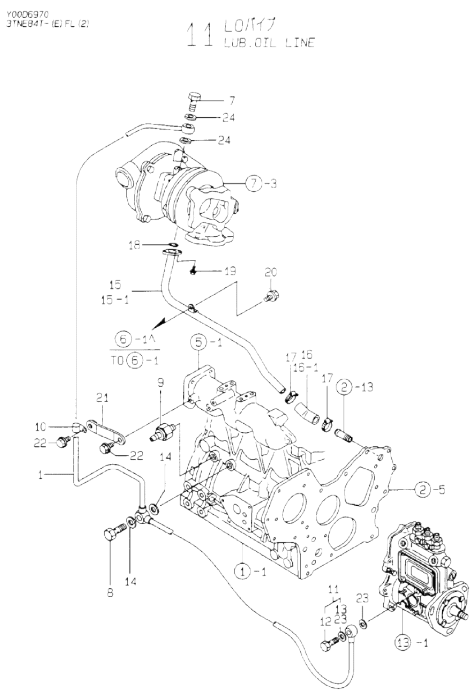

Remarks
(1)INTERCHANGEABLE BY SIMULTANEOUS REPLACEMENT WITH REF.No.16-1.

(A)=3TNE84T-FL (D)=
(B)=3TNE84T-FL2 (E)=
(C)=3TNE84T-EFL2 (F)=

No.	Lev.	Parts No.	Description	Q'ty (A)	(B)	(C)	(D)	(E)	(F)	I	R
1	1	129139-39030	PIPE ASSY, OIL	1	1	1					
7	1	105010-39140	BOLT, PIPE JOINT	1	1	1					
8	1	124160-39140	BOLT, PIPE JOINT M10	1	1	1					
9	1	121252-39450	SWITCH, HYDRAULIC	1	1	1					
10	1	124223-39900	RETAINER	1	2	2					
11	1	124550-59830	BOLT ASSY, JOINT M8	1	1	1				W	
	(A=E31714)	(B=E42668)									
12	2	124550-59820	BOLT, PIPE JOINT M8	1	1	1					
13	2	22190-080002	WASHER, SEAL 6	1	1					W	
	(A=E31714)	(B=E42668)									
13-1	2	22190-080003	WASHER, SEAL 8	1	1	1				N	
	(A=EXXX)	(B=E45100)									
14	1	23414-100000	GASKET, 10X1.0	2	2	2					
15	1	129139-39601	PIPE, OIL	1	1	1					
15-1	1	129139-39610	PIPE, OIL RETURN	1	1	1				F	1
	(A=*2007.06.)	(B=*2007.06.)	(C=*2007.06.)								
16	1	129403-39610	JOINT, RUBBER	1	1	1					
16-1	1	129044-39610	JOINT, RUBBER	1	1	1				S	
	(A=*2007.06.)	(B=*2007.06.)	(C=*2007.06.)								
17	1	23000-022000	CLAMP, 22	2	2	2					
18	1	24314-000160	O-RING, 4CP16.0	1	1	1					
19	1	26106-060162	BOLT, M6X 16 PLATED	2	2	2					
20	1	26106-080122	BOLT, M8X 12 PLATED	1	1	1					
21	1	129012-39910	SUPPORT		1	1					
22	1	26106-080162	BOLT, M8X 16 PLATED		2	2					
23	1	22190-080002	WASHER, SEAL 6	2	2						
23-1	1	22190-080002	WASHER, SEAL 6	1	1					K	
	(A=E31714)	(B=E42668)									
23-2	1	22190-080003	WASHER, SEAL 8	1	1	1				N	
	(A=EXXX)	(B=E45100)									
24	1	23414-080000	GASKET, 8X1.0	2	2	2					

N:Old ◄Yes/No► New. Q:Old ◄No/Yes► New, R:Old ◄Yes/Yes► New, S:Old ◄No/No► New. W:Add. Z:Discontinued. F:Interchangeable by set. K:Q'ty Change

Copyright (C) YANMAR GLOBAL CS CO., LTD. All RightsReserved.

Fig.12. COOLING WATER SYSTEM

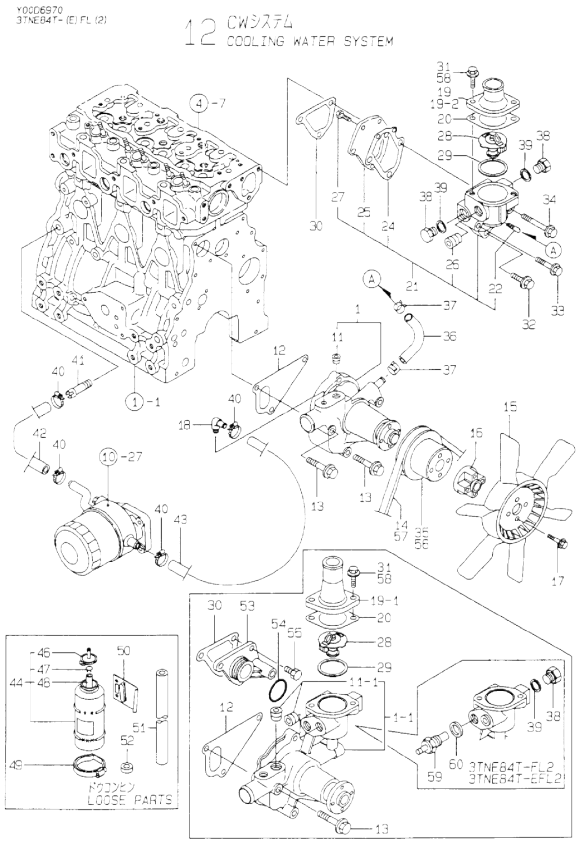

(A)=3TNE84T-FL (D)=
(B)=3TNE84T-FL2 (E)=
(C)=3TNE84T-EFL2 (F)=

No.	Lev.	Parts No.	Description	Q'ty (A)	(B)	(C)	(D)	(E)	(F)	I	R
1	1	129100-42002	PUMP ASSY, WATER	1							
1-1	1	129001-42001	PUMP ASSY, WATER	1						S	
	(A=E09758)										
1-2	1	129001-42002	PUMP ASSY, WATER	1	1					N	
	(A=E15206)										
1-3	1	129001-42003	PUMP ASSY, WATER	1	1	1				N	
	(A=E31714)	(B=E45956)									
11	2	23871-030000	PLUG, R03	1							
11-1	2	23871-030000	PLUG, R03	2	2					K	
	(A=E09758)										
11-2	2	23876-030000	PLUG, R03	2	2	2				N	
	(A=EXXX)	(B=EXXX)									
12	1	129100-42020	GASKET, WATER PUMP	1	1	1					
13	1	26106-080602	BOLT, M8X 60 PLATED	3	3	3					
14	1	121492-42290	V-BELT, A38	1							
14-1	1	25132-003800	V-BELT, A38	1						R	
	(A=E06914)										
14-2	1	25132-003900	V-BELT, A39	1	1					N	
	(A=E13196)										
15	1	171440-44740	FAN, COOLING D350XQF	1	1	1					
16	1	171353-44760	SPACER, FAN	1	1	1					
17	1	26106-060352	BOLT, M6X 35 PLATED	4	4	4					
18	1	129103-49301	ELBOW, PT1/4	1	1	1					
19	1	129350-49530	COVER, THERMOSTAT	1							
19-1	1	129350-49560	COVER, THERMOSTAT	1	1					S	
	(A=E09758)										
19-2	1	129350-49530	COVER, THERMOSTAT		1	1				S	
		(B=E40486)									
20	1	129795-49551	GASKET	1	1	1					
21	1	129100-49800	CASE ASSY,THERMOSTAT	1						Z	
	(A=E09758)										
22	2	124770-11770	JOINT, PIPE PT1/8	1						Z	
	(A=E09758)										
24	2	129100-49820	GASKET	1						Z	
	(A=E09758)										
25	2	129100-49830	COVER, THERMOSTAT	1						Z	
	(A=E09758)										
26	2	23871-030000	PLUG, R03	1						Z	
	(A=E09758)										
27	2	26116-060162	BOLT, M6X 16 PLATED	2						Z	
	(A=E09758)										
28	1	129155-49800	THERMOSTAT, 71	1	1	1					
29	1	129150-49811	GASKET, THERMOSTAT	1	1	1					
30	1	129100-49840	GASKET	1	1	1					
31	1	26106-080202	BOLT, M8X 20 PLATED	2							
32	1	26106-080252	BOLT, M8X 25 PLATED	1						Z	
	(A=E09758)										
33	1	26106-080502	BOLT, M8X 50 PLATED	1						Z	
	(A=E09758)										
34	1	26106-080602	BOLT, M8X 60 PLATED	1						Z	
	(A=E09758)										

N:Old ←Yes/No→ New. Q:Old ←No/Yes→ New. R:Old ←Yes/Yes→ New. S:Old ←No/No→ New. W:Add. Z:Discontinued. F:Interchangeable by set. K:Q'ty Change

++ CONTINUE ++

Copyright (C) YANMAR GLOBAL CS CO., LTD. All RightsReserved.

Fig.12. COOLING WATER SYSTEM

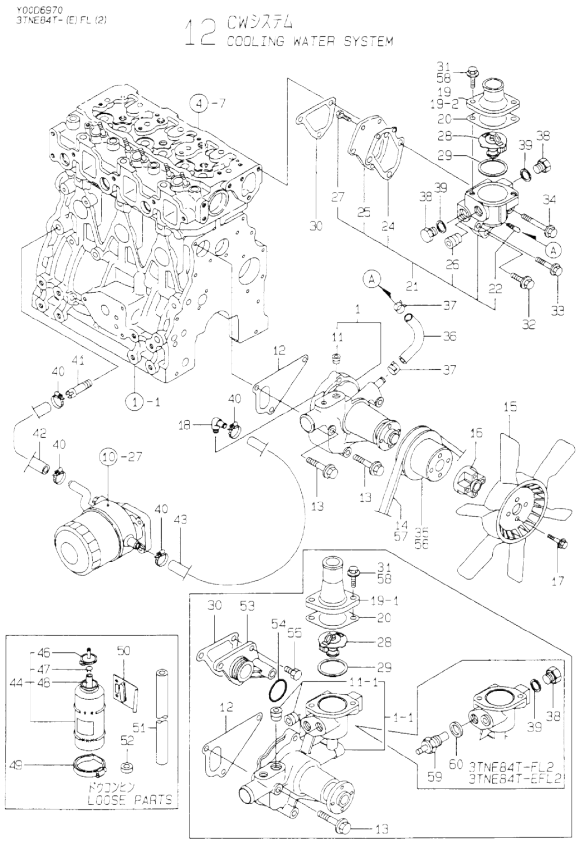

(A)=3TNE84T-FL (D)=
(B)=3TNE84T-FL2 (E)=
(C)=3TNE84T-EFL2 (F)=

No.	Lev.	Parts No.	Description	Q'ty (A)	(B)	(C)	(D)	(E)	(F)	I	R
35	1	129120-42350	V-PULLEY, 130	1	1						
36	1	129100-49050	PIPE, WATER	1							
36-1	1	129132-49050	PIPE, WATER	1							N
	(A=E01937)										
36-2	1	129132-49050	PIPE, WATER	1							Z
	(A=E09758)										
37	1	23000-016000	CLAMP, 16	2							Z
	(A=E09758)										
38	1	121450-42450	PLUG, M16	2	1	1					
39	1	124465-44950	GASKET, 16	2	1	1					
40	1	23000-022000	CLAMP, 22	4	4	4					
41	1	104207-44480	JOINT	1							
41-1	1	129122-44480	JOINT	1	1	1					N
	(A=E12684)										
42	1	129120-49030	HOSE	1							
42-1	1	129012-49030	HOSE, WATER	1	1	1					N
	(A=E02477)										
43	1	129403-49050	PIPE, WATER	1	1	1					
44	1	124450-44510	TANK ASSY, SUB	1	1	1					
46	2	124450-44530	CAP	1	1	1					
47	2	124450-44560	RETAINER	1	1	1					
48	2	23061-070230	PIPE, 7X 230	1	1	1					
49	1	124450-44550	BAND	1	1	1					
50	1	121256-44600	BRACKET, SUB TANK	1	1	1					
51	1	129150-49160	PIPE, WATER DRAIN	1							
52	1	129150-49360	GASKET	1	1	1					
53	1	129001-42040	JOINT	1	1	1					W
	(A=E09758)										
54	1	24321-000300	O-RING, 1AG30.0	1	1						W
	(A=E09758)										
54-1	1	129486-42140	O-RING, G30	1	1	1					N
	(A=E31714)	(B=E45956)									
55	1	26106-080182	BOLT, M8X 18 PLATED	3							W
	(A=E09758)										
55-1	1	26106-080162	BOLT, M8X 16 PLATED	3	3	3					N
	(A=E12684)										
56	1	129556-42350	V-PULLEY, 96			1					
57	1	25132-003800	V-BELT, A38			1					
58	1	26106-080222	BOLT, M8X 22 PLATED		2	2					
59	1	171056-49351	SENSOR		1	1					
60	1	129150-49360	GASKET		1	1					

N:Old ◄Yes/No► New. Q:Old ◄No/Yes► New. R:Old ◄Yes/Yes► New. S:Old ◄No/No► New. W:Add. Z:Discontinued. F:Interchangeable by set. K:Q'ty Change

Copyright (C) YANMAR GLOBAL CS CO., LTD. All RightsReserved.

Fig.13. FUEL INJECTION PUMP

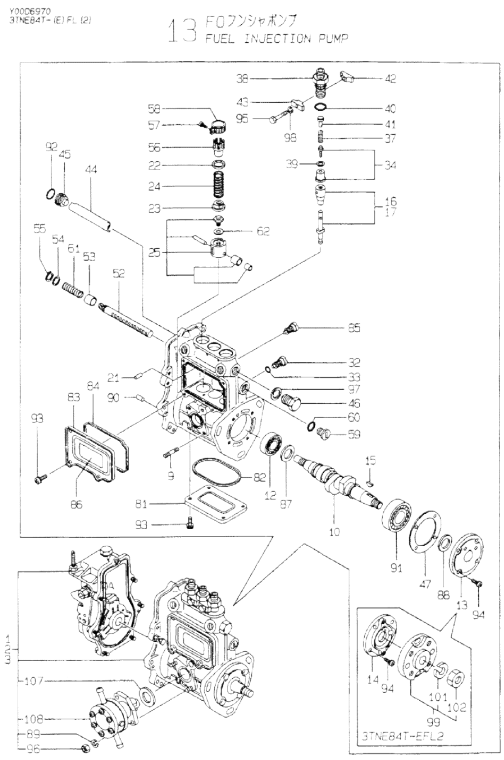

Remarks
(1) GOVERNOR(FIG.NO.14,15)IS INCORPORATED IN THIS FUEL INJECTION PUMP.(REF.NO.1,2,3).

(A)=3TNE84T-FL
(B)=3TNE84T-FL2
(C)=3TNE84T-EFL2
(D)=
(E)=
(F)=

No.	Lev.	Parts No.	Description	Q'ty (A)	(B)	(C)	(D)	(E)	(F)	I	R
1	1	729012-51360	PUMP ASSY, INJECTION	1							1
2	1	729215-51371	PUMP ASSY, INJECTION		1						1
3	1	729215-51450	PUMP ASSY, INJECTION			1					1
9	2	129155-51020	STUD	2	2	2					
10	2	119810-51040	CAMSHAFT	1	1	1					
12	2	129155-51050	BEARING, 17BM001D	1	1	1					
13	2	129155-51060	SUPPORT, CAMSHAFT	1	1						
14	2	129208-51060	SUPPORT			1					
15	2	122710-51090	KEY	1	1	1					
16	2	129506-51100	PLUNGER ASSY	3							
17	2	129470-51101	PLUNGER ASSY		3	3					
21	2	129155-51140	PIN	3	3	3					
22	2	174307-51170	RETAINER, SPRING A	3	3	3					
23	2	129155-51180	RETAINER, SPRING	3	3	3					
24	2	124950-51190	SPRING, PLUNGER	3	3	3					
25	2	129155-51200	TAPPET ASSY	3	3	3					
32	2	129155-51270	STOPPER, TAPPET	3	3	3					
33	2	129155-51280	O-RING, S6	3	3	3					
34	2	129505-51300	VALVE ASSY, DELIVERY	3	3	3					
37	2	129155-51320	SPRING, DELIVERY	3	3	3					
38	2	129155-51340	RETAINER	3	3	3					
39	2	124550-51350	GASKET, DELIVERY	3	3	3					
40	2	124550-51370	O-RING	3	3	3					
41	2	129155-51370	STOPPER, VALVE	3	3	3					
42	2	129155-51380	STOPPER	2	2	2					
43	2	129155-51390	STOPPER	2	2	2					
44	2	129155-51400	DEFLECTOR	1	1	1					
45	2	129155-51410	BOLT	1	1	1					
46	2	129155-51420	PLUG, M16	1	1	1					
47	2	129155-51450	SHIM SET, ADJUSTING	1	1	1					
52	2	129155-51500	RACK, CONTROL	1	1	1					
53	2	129155-51521	BUSH, RACK	1	1	1					
54	2	129155-51530	SPACER	1	1	1					
55	2	129155-51540	CIRCLIP	1	1	1					
56	2	129155-51550	PINION, CONTROL	3	3	3					
57	2	122117-51560	SCREW	3	3	3					
58	2	174307-51560	PINION	3	3	3					
59	2	129155-51570	PLUG, M12	1	1	1					
60	2	129155-51580	O-RING	1	1	1					
61	2	129155-51591	SPRING, RACK	1	1	1					
62	2	129155-51600	SHIM SET, ADJUSTING	3	3	3					
81	2	129155-51700	COVER	1	1	1					
82	2	129155-51710	GASKET	1	1	1					
83	2	129155-51750	COVER	1	1	1					
84	2	129155-51760	GASKET	1	1	1					
85	2	129155-51790	STOOPER, RACK	1	1	1					
86	2	129156-51910	LABEL, CAUTION	1	1	1					
87	2	129155-51930	SPACER, T=3.25	1	1	1					
88	2	129155-51940	SPACER, T=1.5	1	1	1					
89	2	22217-060000	WASHER, SPRING 6	2	2	2					
90	2	22351-050010	PIN, SPRING 5.0X10	2	2	2					

N:Old ←Yes/No→ New. Q:Old ←No/Yes→ New. R:Old ←Yes/Yes→ New. S:Old ←No/No→ New. W:Add. Z:Discontinued. F:Interchangeable by set. K:Q'ty Change

++ CONTINUE ++

Copyright (C) YANMAR GLOBAL CS CO., LTD. All RightsReserved.

Fig.13. FUEL INJECTION PUMP

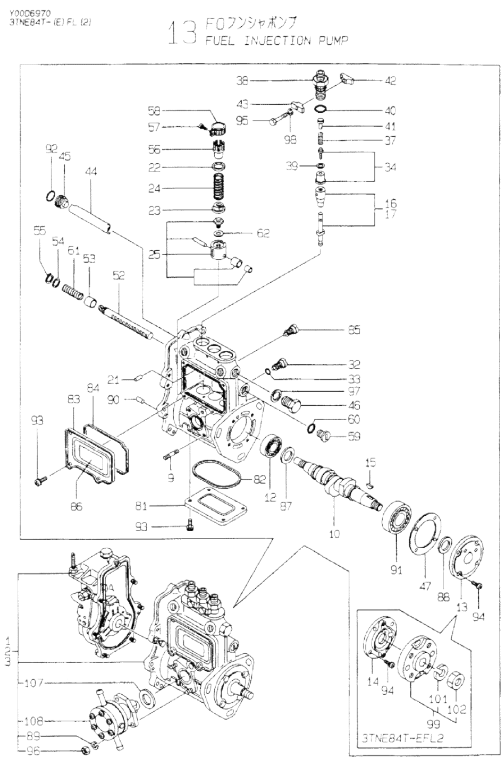

Remarks
(1) GOVERNOR(FIG.NO.14,15)IS INCORPORATED IN THIS FUEL INJECTION PUMP.(REF.NO.1,2,3).

(A)=3TNE84T-FL
(B)=3TNE84T-FL2
(C)=3TNE84T-EFL2
(D)=
(E)=
(F)=

No.	Lev.	Parts No.	Description	Q'ty (A)	(B)	(C)	(D)	(E)	(F)	I	R
91	2	24101-063034	BEARING, BALL 6303	1	1	1					
92	2	24341-000160	O-RING, 1AS16.0	1	1	1					
93	2	26022-050102	SCREW, M5X10	8	8	8					
94	2	26022-060162	SCREW, M6X16	4	4	4					
95	2	26116-050302	BOLT, M5X 30 PLATED	2	2	2					
96	2	26716-060002	NUT, M6	2	2	2					
97	2	22190-160002	WASHER, SEAL 16	1	1	1					
98	2 (A=EXXX)	22217-050000	WASHER, SPRING 5	2	2	2				W	
99	2	129208-54500	FLANGE ASSY			1					
101	3	22217-120000	WASHER, SPRING 12			1					
102	3	26716-120002	NUT, M12			1					
107	2	129155-52050	GASKET	1	1	1					
108	2	129100-52100	PUMP ASSY, FUEL FEED	1	1	1					

N:Old ←Yes/No→ New. Q:Old ←No/Yes→ New, R:Old ←Yes/Yes→ New, S:Old ←No/No→ New, W:Add, Z:Discontinued, F:Interchangeable by set, K:Q'ty Change

Copyright (C) YANMAR GLOBAL CS CO., LTD. All RightsReserved.

Fig.14. GOVERNOR

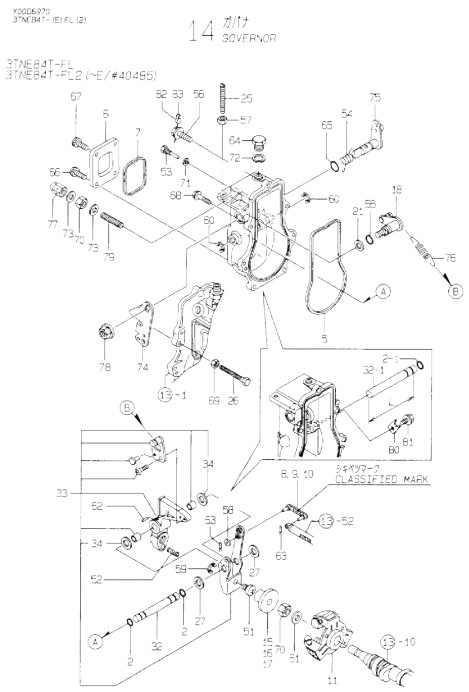

Remarks
(1) SELECTIVE PARTS: CERTAIN THE CLASSIFICATION MARK, THEN PLACE YOUR ORDER(REFER TO ILLUSTRATION)
(2) SELECTIVE PARTS.
(3) L=REF.NO.32-1 68M/M,32-2 70.5M/M.
* THIS FIGURE(GOVERNOR ASSY) IS INCORPORATED IN THE FUEL INJECTION PUMP ASSY(FIG.13).

(A)=3TNE84T-FL (D)=
(B)=3TNE84T-FL2 (E)=
(C)=3TNE84T-EFL2 (F)=

No.	Lev.	Parts No.	Description	Q'ty (A)	(B)	(C)	(D)	(E)	(F)	I	R
2	2	129155-51280	O-RING, S6	2							
2-1	2	129155-51280	O-RING, S6	1	1					K	
	(A=E15623)										
5	2	129155-61050	GASKET	1	1						
6	2	129155-61060	COVER, GOVERNOR CASE	1	1						
7	2	129155-61070	GASKET	1	1						
8	2	129155-61120	LINK, L=30 MARK 0	1	1						1
9	2	129155-61130	LINK, L=31 MARK 1	1	1						1
10	2	129155-61140	LINK, L=30.5 MARK 05	1	1						1
11	2	129155-61201	WEIGHT ASSY,GOVERNOR	1	1						
15	2	129155-61341	SLEEVE	1	1						2
16	2	129155-61350	SLEEVE, L=24.9	1	1						2
17	2	129155-61360	SLEEVE, L=25.2	1	1						2
18	2	129100-61400	SHAFT ASSY	1	1						
21	2	129155-61430	SPACER	1	1						
25	2	129155-61450	BOLT, LIMITER	1	1						
26	2	129155-61460	BOLT, IDLE	1	1						
27	2	129155-61480	SPACER ASSY	2	2						
32	2	129155-61490	SHAFT	1							
32-1	2	129155-61380	SHAFT	1						S	
	(A=E15623)										
32-2	2	119660-61491	SHAFT	1	1					S	3
	(A=E30675)										
33	2	129500-61501	LEVER ASSY, GOVERNOR	1	1						
34	3	174307-51700	SHIM SET	2	2						
51	2	129155-61540	SHIFTER	1	1						
52	2	129100-61650	SPRING, CONTROLLER	1	1						
53	2	129155-61810	PIN	1	1						
54	2	129100-61821	SPRING, RETURN	1	1						
55	2	129155-61830	O-RING, S10	1	1						
56	2	129155-61950	BOLT	1	1						
57	2	124550-66370	NUT, M6	1	1						
58	2	22117-040000	WASHER, 4	1	1						
59	2	22272-000040	RING, E- 4	1	1						
60	2	22272-000060	RING, E- 6	2						Z	
	(A=E15623)										
61	2	22287-120000	WASHER, 12	1	1						
62	2	22351-030016	PIN, SPRING 3.0X16	1	1						
63	2	22372-040000	PIN, SNAP 4	2	2						
64	2	23887-100002	PLUG, 10	1	1						
65	2	24311-240100	O-RING, 1AP10A	1	1						
66	2	26022-050102	SCREW, M5X10	2	2						
67	2	26023-050102	SCREW, M5X10	2	2						
68	2	26106-060202	BOLT, M6X 20 PLATED	6	6						
69	2	26756-060002	NUT, LOCK M6	1	1						
70	2	26776-120002	NUT, LOCK M12	2	2						
71	2	22190-060002	WASHER, SEAL 6	1							
71-1	2	22190-060002	WASHER, SEAL 6	2	2					K	
	(A=E15623)										
71-2	2	22190-060003	SEAL WASER 6	2	2					N	
	(A=E31714)		(B=E40468)								

N:Old ←Yes/No→ New. Q:Old ←No/Yes→ New. R:Old ←Yes/Yes→ New. S:Old ←No/No→ New. W:Add. Z:Discontinued. F:Interchangeable by set. K:Q'ty Change

++ CONTINUE ++

Copyright (C) YANMAR GLOBAL CS CO., LTD. All RightsReserved.

Fig.14. GOVERNOR

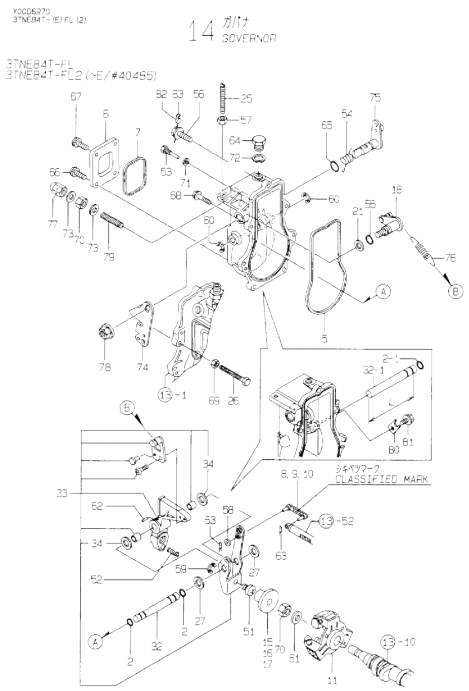

Remarks
(1) SELECTIVE PARTS: CERTAIN THE CLASSIFICATION MARK, THEN PLACE YOUR ORDER(REFER TO ILLUSTRATION)
(2) SELECTIVE PARTS.
(3) L=REF.NO.32-1 68M/M,32-2 70.5M/M.
* THIS FIGURE(GOVERNOR ASSY) IS INCORPORATED IN THE FUEL INJECTION PUMP ASSY(FIG.13).

(A)=3TNE84T-FL (D)=
(B)=3TNE84T-FL2 (E)=
(C)=3TNE84T-EFL2 (F)=

No.	Lev.	Parts No.	Description	Q'ty (A)	(B)	(C)	(D)	(E)	(F)	I	R
72	2	22190-100002	WASHER, SEAL 10	1	1						
73	2	22190-120002	WASHER, SEAL 12	2	2						
74	2	129100-61440	LEVER, CONTROL	1	1						
75	2	129255-61802	LEVER, STOP	1	1						
76	2	129489-61700	SPRING, GOVERNOR	1	1						
77	2	26687-120002	NUT, CAP M12	1	1						
78	2	26366-080002	NUT, M8	1	1						
79	2	129155-61470	BOLT, CONTROL	1	1						
80	2	119660-61901	RETAINER, SHAFT	1	1					W	
81	(A=E15623) 2 (A=E15623)	26106-060102	BOLT, M6X 10 PLATED	2	2					W	
82	1	135210-61090	LEAD	1	1						
83	1	22451-060000	WIRE, 0.6	1	1						

N:Old ←Yes/No→ New. Q:Old ←No/Yes→ New. R:Old ←Yes/Yes→ New. S:Old ←No/No→ New. W:Add. Z:Discontinued. F:Interchangeable by set. K:Q'ty Change

Copyright (C) YANMAR GLOBAL CS CO., LTD. All RightsReserved.

Fig.15. GOVERNOR

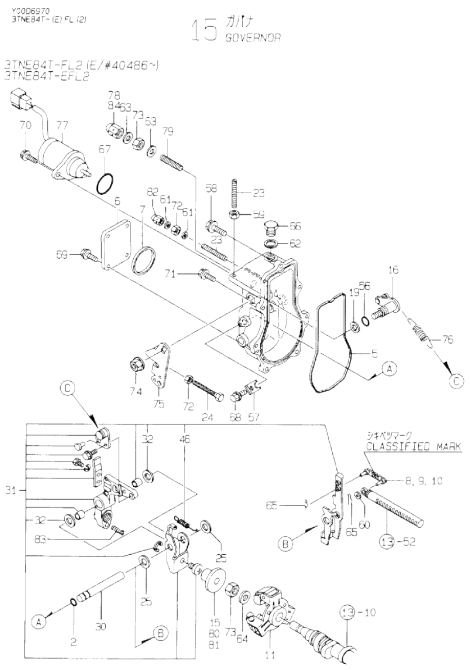

Remarks
(1) SELECTIVE PARTS: CERTAIN THE CLASSIFICATION MARK, THEN PLACE YOUR ORDER(REFER TO ILLUSTRATION)
(2) SELECTIVE PARTS.
* THIS FIGURE(GOVERNOR ASSY) IS INCORPORATED IN THE FUEL INJECTION PUMP ASSY(FIG.13).

(A)=3TNE84T-FL
(B)=3TNE84T-FL2
(C)=3TNE84T-EFL2
(D)=
(E)=
(F)=

No.	Lev.	Parts No.	Description	Q'ty (A)	(B)	(C)	(D)	(E)	(F)	I	R
2	2	129155-51280	O-RING, S6		1	1					
5	2	129052-61050	GASKET		1	1					
6	2	129052-61060	COVER, GOVERNOR CASE		1	1					
7	2	129052-61070	GASKET		1	1					
8	2	129155-61120	LINK, L=30 MARK 0		1	1					1
9	2	129155-61130	LINK, L=31 MARK 1		1	1					1
10	2	129155-61140	LINK, L=30.5 MARK 05		1	1					1
11	2	129155-61201	WEIGHT ASSY,GOVERNOR		1	1					
15	2	129155-61341	SLEEVE		1	1					2
16	2	129100-61400	SHAFT ASSY		1	1					
19	2	129155-61430	SPACER		1	1					
23	2	129155-61450	BOLT, LIMITER		2	2					
24	2	129155-61460	BOLT, IDLE		1	1					
25	2	129155-61480	SPACER ASSY		2	2					
30	2	129052-61390	SHAFT		1	1					
31	2	129052-61500	LEVER ASSY, GOVERNOR		1	1					
32	3	174307-51700	SHIM SET		2	2					
46	3	129052-61540	SPRING, SET		1	1					
56	2	129155-61830	O-RING, S10		1	1					
57	2	119660-61901	RETAINER, SHAFT		1	1					
58	2	129155-61950	BOLT		1	1					
59	2	124550-66370	NUT, M6		1	1					
60	2	22117-040000	WASHER, 4		1	1					
61	2	22190-060003	SEAL WASER 6		2	2					
62	2	22190-100002	WASHER, SEAL 10		1	1					
63	2	22190-120002	WASHER, SEAL 12		2	2					
64	2	22287-120000	WASHER, 12		1	1					
65	2	22372-040000	PIN, SNAP 4		2	2					
66	2	23887-100002	PLUG, 10		1	1					
67	2	24341-000280	O-RING, 1AS28.0		1	1					
67-1	2	158552-61900	O-RING		1	1					N
			(B=EXXXXX) (C=EXXXXX)								
68	2	26106-060102	BOLT, M6X 10 PLATED		1	1					
69	2	26106-060102	BOLT, M6X 10 PLATED		4	4					
70	2	26106-060142	BOLT, M6X 14 PLATED		2	2					
71	2	26106-060202	BOLT, M6X 20 PLATED		6	6					
72	2	26756-060002	NUT, LOCK M6		2	2					
73	2	26776-120002	NUT, LOCK M12		2	2					
74	2	26366-080002	NUT, M8		1	1					
75	2	129100-61440	LEVER, CONTROL		1	1					
76	2	129489-61700	SPRING, GOVERNOR		1	1					
77	2	119233-77931	SOLENOID, STOP		1	1					
78	2	26687-120002	NUT, CAP M12		1						
79	2	129155-61470	BOLT, CONTROL		1	1					
80	2	129155-61350	SLEEVE, L=24.9		1	1					2
81	2	129155-61360	SLEEVE, L=25.2		1	1					2
82	2	119600-66840	NUT, CAP		1	1					
83	2	129100-61650	SPRING, CONTROLLER		1	1					
84	2	129100-61930	NUT, CAP			1					

N:Old ←Yes/No→ New. Q:Old ←No/Yes→ New. R:Old ←Yes/Yes→ New. S:Old ←No/No→ New. W:Add. Z:Discontinued. F:Interchangeable by set. K:Q'ty Change

Copyright (C) YANMAR GLOBAL CS CO., LTD. All RightsReserved.

Fig.16. FUEL INJECTION VALVE

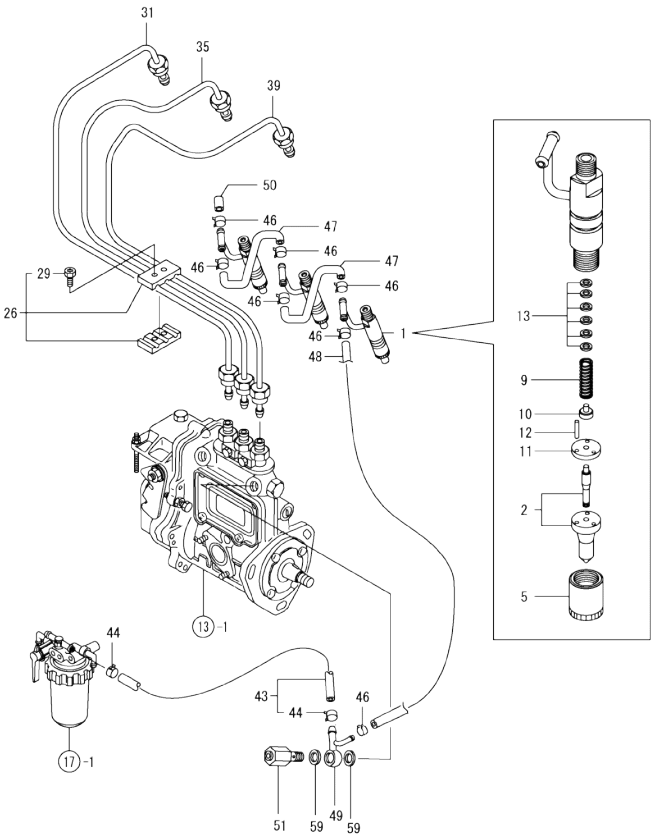

(A)=3TNE84T-FL
(B)=3TNE84T-FL2
(C)=3TNE84T-EFL2
(D)=
(E)=
(F)=

No.	Lev.	Parts No.	Description	Q'ty (A)	(B)	(C)	(D)	(E)	(F)	I	R
1	1	729503-53200	VALVE ASSY,INJECTION	3	3	3					
2	2	129503-53050	VALVE ASSY,INJECTION	3	3	3					
5	2	114250-53080	NUT, NOZZLE D16.95	3	3	3					
9	2	114250-53120	SPRING, NOZZLE	3	3	3					
10	2	114250-53130	SEAT, SPRING	3	3	3					
11	2	114250-53140	PLATE	3	3	3					
12	2	114250-53210	PIN	6	6	6					
13	2	114250-53400	SHIM SET	3	3	3					
26	1	129150-59120	RETAINER, PIPE	1	1	1					
29	2	129150-59130	BOLT, M4X12	2							
29-1	2	129150-59131	BOLT, M4X14	2	2	2					N
	(A=E01153)										
31	1	129100-59910	PIPE ASSY, INJECTION	1							
31-1	1	129100-59912	PIPE ASSY, INJECTION	1	1						R
	(A=E06034)										
31-2	1	129211-59810	PIPE ASSY, INJECTION	1	1	1					R
	(A=E31714)	(B=E32162)									
35	1	129100-59920	PIPE ASSY, INJECTION	1							
35-1	1	129100-59922	PIPE ASSY, INJECTION	1	1						R
	(A=E06034)										
35-2	1	129211-59820	PIPE ASSY, INJECTION	1	1	1					R
	(A=E31714)	(B=E32162)									
39	1	129100-59930	PIPE ASSY, INJECTION	1							
39-1	1	129100-59932	PIPE ASSY, INJECTION	1	1						R
	(A=E06034)										
39-2	1	129211-59830	PIPE ASSY, INJECTION	1	1	1					R
	(A=E31714)	(B=E32162)									
43	1	129210-59130	PIPE ASSY, FUEL	1							W
	(A=E31714)										
44	2	124766-59050	CLIP, HOSE 12	2							
46	1	124066-59100	CLIP, HOSE 8	7	7	7					
47	1	121250-59550	PIPE, FUEL D8X120	2	2	2					
48	1	119840-59560	PIPE, FUEL RETURN	1	1	1					
49	1	119840-59570	JOINT	1	1	1					
50	1	129150-59580	CAP	1	1	1					
51	1	129100-59951	VALVE ASSY, CHECK	1	1	1					
59	1	23414-120000	GASKET, 12X1.0	2	2						
59-1	1	22190-120002	WASHER, SEAL 12	2	2	2					N
	(A=E31714)	(B=E45956)									

N:Old ←Yes/No→ New. Q:Old ←No/Yes→ New. R:Old ←Yes/Yes→ New. S:Old ←No/No→ New. W:Add. Z:Discontinued. F:Interchangeable by set. K:Q'ty Change

Copyright (C) YANMAR GLOBAL CS CO., LTD. All RightsReserved.

Fig.17. FUEL LINE

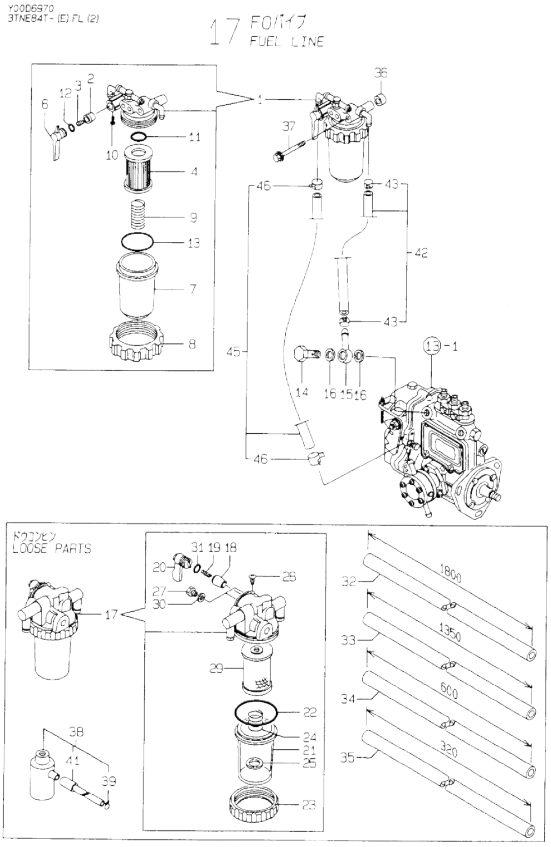

(A)=3TNE84T-FL
(B)=3TNE84T-FL2
(C)=3TNE84T-EFL2
(D)=
(E)=
(F)=

No.	Lev.	Parts No.	Description	Q'ty (A)	(B)	(C)	(D)	(E)	(F)	I	R
1	1	129052-55620	FILTER ASSY, FUEL	1	1	1					
2	2	104200-55321	VALVE, TAPER	1	1	1					
3	2	104200-55330	SPRING, VALVE	1	1	1					
4	2	129100-55650	ELEMENT	1	1	1					
6	2	129100-55670	LEVER	1	1	1					
7	2	129100-55680	CUP, STRAINER	1	1	1					
8	2	129100-55690	RING, RETAINING	1	1	1					
9	2	129100-55700	SPRING	1	1	1					
10	2	104200-55750	SCREW, M4	1	1	1					
11	2	24311-000160	O-RING, 1AP16.0	1	1	1					
12	2	24311-240100	O-RING, 1AP10A	1	1	1					
13	2	24321-000650	O-RING, 1AG65.0	1	1	1					
14	1	103854-39140	BOLT, PIPE JOINT	1	1	1					
15	1	101304-59020	JOINT, PIPE 12	1	1	1					
16	1	104200-59170	GASKET, 12	2							
16-1	1	22190-120002	WASHER, SEAL 12	2	2	2					N
	(A=E12111)										
17	1	129335-55700	SEPARATOR ASSY,WATER		1	1					
18	2	104200-55321	VALVE, TAPER		1	1					
19	2	104200-55330	SPRING, VALVE		1	1					
20	2	104200-55341	HANDLE		1	1					
21	2	124064-55510	COVER		1	1					
22	2	102103-55520	O-RING		1	1					
23	2	110250-55610	RING, RETAINING		1	1					
24	2	121257-55720	SPRING		1	1					
25	2	121257-55731	FLOAT		1	1					
27	2	101720-55750	PLUG, 6		2	2					
28	2	104200-55750	SCREW, M4		1	1					
29	2	171081-55910	SCREEN		1	1					
30	2	23418-060000	GASKET, 6X1.0		2	2					
31	2	24311-240100	O-RING, 1AP10A		1	1					
32	1	121256-59072	PIPE, FUEL OIL	2	2	2					
33	1	121522-59080	PIPE, FUEL		1	1					
34	1	124323-59100	PIPE, FUEL D12X600		2	2					
35	1	121750-59110	PIPE, FUEL D12X320		2	2					
36	1	129411-55690	SPACER	1							
37	1	26014-080852	BOLT, M8X 85	1							
38	1	129136-66890	BREATHER ASSY	1	1						Z
		(B=E40486)									
39	2	124450-44560	RETAINER	1	1						Z
		(B=E40486)									
41	2	129136-66860	PIPE , BREATHER	1	1						Z
		(B=E40486)									
42	1	129210-59030	PIPE ASSY, FUEL	1							W
	(A=E31714)										
43	2	124766-59050	CLIP, HOSE 12	2							
45	1	129210-59130	PIPE ASSY, FUEL	1							W
	(A=E31714)										
46	2	124766-59050	CLIP, HOSE 12	2							

N:Old ←Yes/No→ New. Q:Old ←No/Yes→ New. R:Old ←Yes/Yes→ New. S:Old ←No/No→ New. W:Add. Z:Discontinued. F:Interchangeable by set. K:Q'ty Change

Copyright (C) YANMAR GLOBAL CS CO., LTD. All RightsReserved.

Fig.18. ENGINE STOP DEVICE

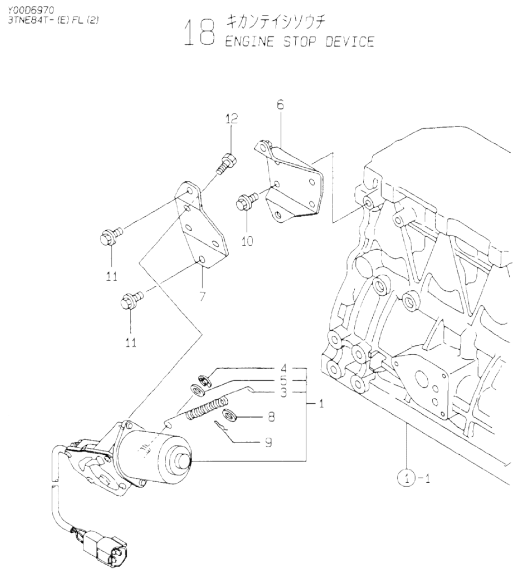

(A)=3TNE84T-FL
(B)=3TNE84T-FL2
(C)=3TNE84T-EFL2
(D)=
(E)=
(F)=

No.	Lev.	Parts No.	Description	Q'ty (A)	(B)	(C)	(D)	(E)	(F)	I	R
1	1	129136-66800	MOTOR ASSY, STOP	1	1					Z	
		(B=E40486)									
3	2	129107-66830	SPRING, STOP MOTOR	1	1					Z	
		(B=E40486)									
4	2	129566-66880	RING, SNAP	1	1					Z	
		(B=E40486)									
5	2	129566-66890	WASHER	1	1					Z	
		(B=E40486)									
6	1	129107-66810	BRACKET, STOP MOTOR	1	1					Z	
		(B=E40486)									
7	1	129107-66820	BRACKET, STOP MOTOR	1	1					Z	
		(B=E40486)									
8	1	22117-080000	WASHER, 8	1	1					Z	
		(B=E40486)									
9	1	22360-080000	SNAP PIN 8	1	1					Z	
		(B=E40486)									
10	1	26106-080122	BOLT, M8X 12 PLATED	2	2					Z	
		(B=E40486)									
11	1	26106-080122	BOLT, M8X 12 PLATED	2	2					Z	
		(B=E40486)									
12	1	26116-050102	BOLT, M5X 10 PLATED	3	3					Z	
		(B=E40486)									

N:Old ◄Yes/No► New. Q:Old ◄No/Yes► New. R:Old ◄Yes/Yes► New. S:Old ◄No/No► New. W:Add. Z:Discontinued. F:Interchangeable by set. K:Q'ty Change

Copyright (C) YANMAR GLOBAL CS CO., LTD. All RightsReserved.

Fig.19. STARTING MOTOR

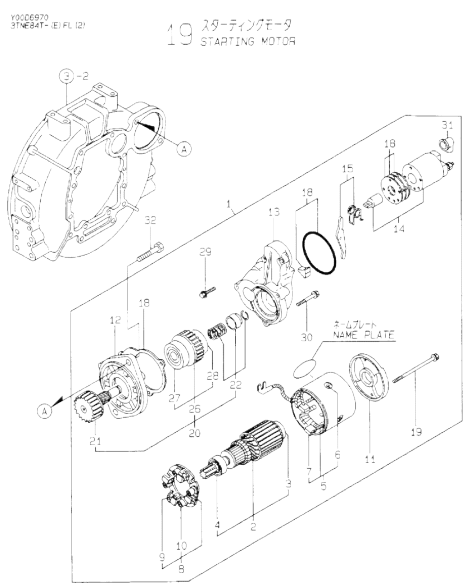

Remarks
(1) CERTAIN THE NAME PLATE,THEN PLACE YOUR PLACE YOUR ORDER.
* NAME PLATE<129136-77010>=REF.NO.2, 14,20,21.
* NAME PLATE<129400-77011>=REF.NO. 2-1,14-1,20-1,21-1.
* NAME PLATE<129400-77012>=REF.NO. 2-3,5-1,7-1,8-1,9-1,10-1,11-1,19-1.

(A)=3TNE84T-FL (D)=
(B)=3TNE84T-FL2 (E)=
(C)=3TNE84T-EFL2 (F)=

No.	Lev.	Parts No.	Description	Q'ty (A)	(B)	(C)	(D)	(E)	(F)	I	R
1	1	129136-77010	STARTER	1							
1-1	1	129400-77011	STARTER, S13-94A	1	1					R	
	(A=E09758)										
1-2	1	129400-77012	STARTING MOTOR	1	1	1				R	
	(A=E31714)	(B=E33017)									
2	2	129136-77500	ARMATURE ASSY	1							
2-1	2	129400-77400	ARMATURE ASSY	1	1					S	1
	(A=E09758)										
2-2	2	129400-77401	ARMATURE, (NON-ASB.)	1	1					N	
	(A=EXXX)	(B=EXXX)									
2-3	2	129486-77400	ARMATUER	1	1	1				S	1
	(A=E31714)	(B=E33017)									
3	3	171008-77410	BEARING(1)	1							
3-1	3	X2130350900	BALL BEARING	1						R	
	(A=E16514)										
3-2	3	171008-77410	BEARING(1)	1	1	1				N	
	(A=E31714)	(B=E33017)									
4	3	171008-77420	BEARING(2)	1							
4-1	3	X2114255110	BEARING, BALL	1						R	
	(A=E16514)										
4-2	3	171008-77420	BEARING(2)	1	1	1				N	
	(A=E31714)	(B=E33017)									
5	2	129400-77440	COIL ASSY, FIELD	1	1						
5-1	2	129400-77441	COIL ASSY, FIELD	1	1	1				S	1
	(A=E31714)	(B=E33017)									
6	3	171008-77450	SCREW	4	4	4					
7	3	129400-77460	BRUSH (+)	2	2						
7-1	3	129486-77460	BRUSH	2	2	2				S	1
	(A=E31714)	(B=E33017)									
8	2	129400-77470	HOLDER ASSY, BRUSH	1	1						
8-1	2	129486-77470	HOLDER ASSY, BRUSH	1	1	1				S	1
	(A=E31714)	(B=E33017)									
9	3	129400-77460	BRUSH (+)	2	2						
9-1	3	129486-77460	BRUSH	2	2	2				S	1
	(A=E31714)	(B=E33017)									
10	3	129400-77490	SPRING, BRUSH	4	4						
10-1	3	129486-77490	SPRING,START BRUSH	4	4	4				S	1
	(A=E31714)	(B=E33017)									
11	2	129400-77510	COVER, REAR	1	1						
11-1	2	129900-77460	COVER, REAR	1	1	1				S	1
	(A=E31714)	(B=E33017)									
12	2	171008-77510	HOUSING ASSY, GEAR	1	1	1					
13	2	129400-77520	HOUSING, CENTER	1	1	1					
14	2	129136-77310	SWITCH ASSY	1							
14-1	2	129400-77530	SWITCH ASSY,MAGNETIC	1						S	1
	(A=E09758)										
14-2	2	129400-77531	SWITCH ASSY,MAGNETIC	1	1	1				N	
	(A=E27681)										
15	2	171008-77540	LEVER SET, SHIFT	1	1	1					
18	2	129400-77570	COVER KIT, DUST	1	1						
18-1	2	129400-77571	DUST COVER,(NON-ASB.	1	1	1				N	

N:Old ←Yes/No→ New. Q:Old ←No/Yes→ New. R:Old ←Yes/Yes→ New. S:Old ←No/No→ New. W:Add. Z:Discontinued. F:Interchangeable by set. K:Q'ty Change

++ CONTINUE ++

Copyright (C) YANMAR GLOBAL CS CO., LTD. All RightsReserved.

Fig.19. STARTING MOTOR

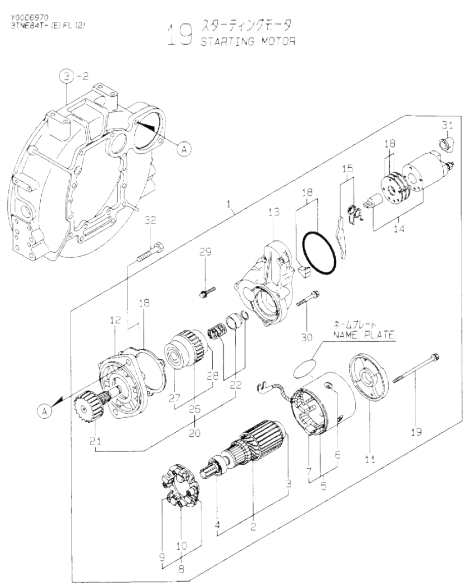

Remarks
(1) CERTAIN THE NAME PLATE,THEN PLACE YOUR PLACE YOUR ORDER.
* NAME PLATE<129136-77010>=REF.NO.2, 14,20,21.
* NAME PLATE<129400-77011>=REF.NO. 2-1,14-1,20-1,21-1.
* NAME PLATE<129400-77012>=REF.NO. 2-3,5-1,7-1,8-1,9-1,10-1,11-1,19-1.

(A)=3TNE84T-FL (D)=
(B)=3TNE84T-FL2 (E)=
(C)=3TNE84T-EFL2 (F)=

No.	Lev.	Parts No.	Description	Q'ty (A)	(B)	(C)	(D)	(E)	(F)	I	R
	(A=EXXX)	(B=EXXX)									
19	2	129400-77640	BOLT, THROUGH	2	2						
19-1	2	129900-77640	BOLT, THROUGHT	2	2	2				S	1
	(A=E31714)	(B=E33017)									
20	2	129136-77210	CLUTCH ASSY	1							
20-1	2	171008-77650	PINION ASSY	1	1	1				S	1
	(A=E09758)										
21	3	129136-77220	SHAFT, PINION	1							
21-1	3	171008-77660	SHAFT, PINION	1	1	1				S	1
	(A=E09758)										
22	3	171008-77670	STOPPER SET, PINION	1	1	1					
26	3	171008-77720	CLUTCH ASSY	1							
26-1	3	X2114555500	CLUTCH ASSY	1	1	1				R	
	(A=E16514)										
27	4	171008-77730	BALL BEARING (3)	1							
27-1	4	X2114955020	BALL BEARING	1	1	1				R	
	(A=E16514)										
28	4	171008-77740	BALL BEARING (4)	1							
28-1	4	X2240410100	BEARING, BALL	1	1	1				R	
	(A=E16514)										
29	2	26106-060322	BOLT, M6X 32 PLATED	2	2	2					
30	2	26106-060402	BOLT, M6X 40 PLATED	3	3	3					
31	2	171008-77750	COVER, M TERMINAL	1						Z	
	(A=E09758)										
32	1	26116-120252	BOLT, M12X 25 PLATED	2	2	2					

N:Old ←Yes/No→ New. Q:Old ←No/Yes→ New. R:Old ←Yes/Yes→ New. S:Old ←No/No→ New. W:Add. Z:Discontinued. F:Interchangeable by set. K:Q'ty Change

Copyright (C) YANMAR GLOBAL CS CO., LTD. All RightsReserved.

Fig.20. GENERATOR

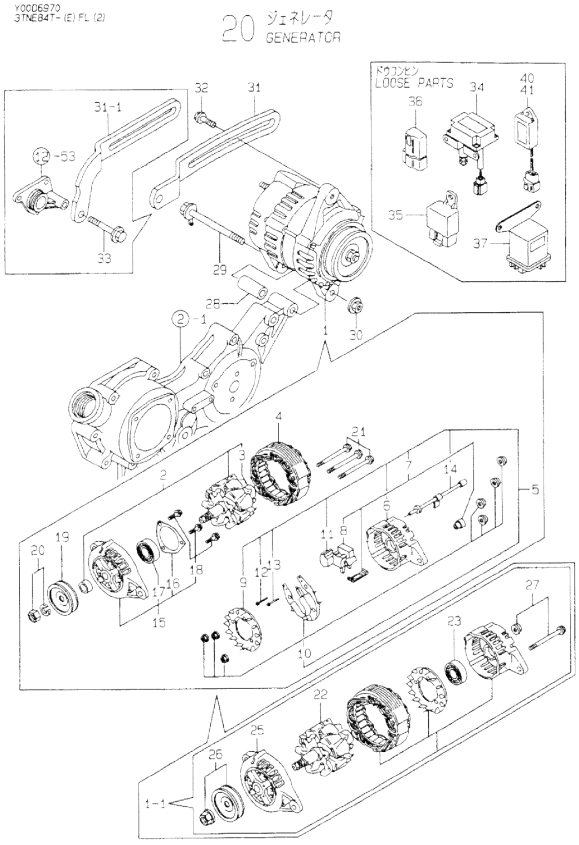

(A)=3TNE84T-FL (D)=
(B)=3TNE84T-FL2 (E)=
(C)=3TNE84T-EFL2 (F)=

No.	Lev.	Parts No.	Description	Q'ty (A)	(B)	(C)	(D)	(E)	(F)	I	R
1	1	119836-77200	GENERATOR	1	1						
1-1	1	119836-77201	GENERATOR (AC)	1	1	1					R
	(A=E31714)	(B=E40486)									
2	2	119836-77700	ROTOR ASSY	1	1						Z
	(A=E31714)	(B=E40486)									
3	3	119836-77850	BALL BEARING	1	1						Z
	(A=E31714)	(B=E40486)									
4	2	119836-77710	STATOR ASSY	1	1						Z
	(A=E31714)	(B=E40486)									
5	2	119836-77721	COVER ASSY, REAR	1	1						Z
	(A=E31714)	(B=E40486)									
6	3	119836-77730	COVER, REAR	1	1						Z
	(A=E31714)	(B=E40486)									
7	3	119836-77741	BRUSH ASSY,REGULATOR	1	1						Z
	(A=E31714)	(B=E40486)									
8	4	119836-77750	BRUSH ASSY	1	1						Z
	(A=E31714)	(B=E40486)									
9	3	119836-77760	GUIDE, FAN SIDE	1	1						Z
	(A=E31714)	(B=E40486)									
10	3	119836-77770	DIODE ASSY	1	1						Z
	(A=E31714)	(B=E40486)									
11	3	119836-77780	CONDENSER	1	1						Z
	(A=E31714)	(B=E40486)									
12	3	119836-77871	BOLT (1)	1	1						Z
	(A=E31714)	(B=E40486)									
13	3	119836-77880	BOLT (2)	1	1						Z
	(A=E31714)	(B=E40486)									
14	3	119836-77890	WIRE ASSY, LEAD	1	1						Z
	(A=E31714)	(B=E40486)									
15	2	119836-77790	COVER ASSY, FRONT	1	1						Z
	(A=E31714)	(B=E40486)									
16	3	119836-77800	RETAINER, BEARING	1	1						Z
	(A=E31714)	(B=E40486)									
17	3	119836-77840	BALL BEARING	1	1						Z
	(A=E31714)	(B=E40486)									
18	3	119836-77860	SCREW KID	1	1						Z
	(A=E31714)	(B=E40486)									
19	2	119836-77810	PULLEY	1	1						Z
	(A=E31714)	(B=E40486)									
20	2	119836-77820	NUT ASSY, PULLEY	1	1						Z
	(A=E31714)	(B=E40486)									
21	2	119836-77830	BOLT, THROUGH	1	1						Z
	(A=E31714)	(B=E40486)									
22	2	129612-77700	ROTOR ASSY	1	1	1					W
	(A=E31714)	(B=E40486)									
23	2	129612-77710	BEARING, BALL	1	1	1					W
	(A=E31714)	(B=E40486)									
25	2	129612-77730	BRACKET ASSY, FILTER	1	1	1					W
	(A=E31714)	(B=E40486)									
26	2	129612-77740	PULLEY	1	1	1					W
	(A=E31714)	(B=E40486)									

N:Old ◄Yes/No► New. Q:Old ◄No/Yes► New, R:Old ◄Yes/Yes► New, S:Old ◄No/No► New, W:Add, Z:Discontinued, F:Interchangeable by set, K:Q'ty Change

++ CONTINUE ++

Copyright (C) YANMAR GLOBAL CS CO., LTD. All RightsReserved.

Fig.20. GENERATOR

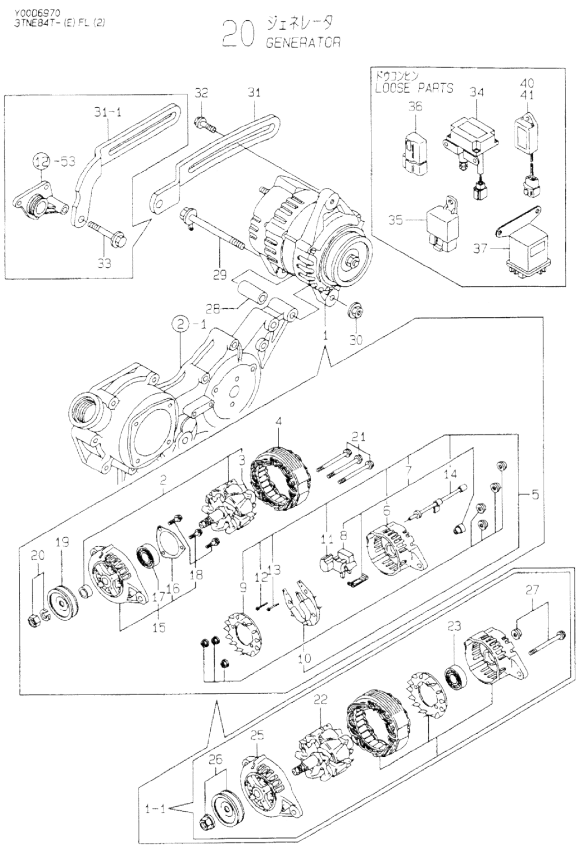

(A)=3TNE84T-FL
(B)=3TNE84T-FL2
(C)=3TNE84T-EFL2
(D)=
(E)=
(F)=

No.	Lev.	Parts No.	Description	Q'ty (A)	(B)	(C)	(D)	(E)	(F)	I	R
27	2	129612-77750	SCREW KIT	1	1	1				W	
	(A=E31714)	(B=E40486)									
28	1	119820-77340	PIECE, DISTANCE	1	1	1					
29	1	129136-77250	BOLT M 8X105	1	1						
29-1	1	129136-77251	BOLT, M8X110	1	1	1				N	
	(A=E31714)	(B=E37493)									
30	1	26366-080002	NUT, M8	1	1						
30-1	1	129612-77260	NUT, ALTERNATOR	1	1	1				R	
	(A=E31714)	(B=E42668)									
31	1	129410-77330	ADJUSTER	1							
31-1	1	129100-77330	ADJUSTER	1	1	1				S	
	(A=E09758)										
32	1	26014-080252	BOLT, M8X 25	1	1						
32-1	1	119810-77340	BOLT, ADJUSTER	1	1	1				N	
	(A=E31714)	(B=E37493)									
33	1	26106-080502	BOLT, M8X 50 PLATED	1	1	1				W	
	(A=E09758)										
34	1	129136-77100	RELAY, SAFETY	1							
34-1	1	129136-77101	RELAY, SAFETY	1	1	1				R	
	(A=E05517)										
35	1	119247-77100	RELAY, SAFETY	2	2					Z	
		(B=E40486)									
36	1	119643-66900	DIODE		1	1				W	
		(B=E40486)									
37	1	119650-77910	RELAY ASSY, GLOW		1	1				W	
		(B=E40486)									
40	1	128300-77920	TIMER	1	1	1					
41	1	129211-77920	TIMER		1	1				W	
		(B=E40486)									

N:Old ←Yes/No→ New. Q:Old ←No/Yes→ New. R:Old ←Yes/Yes→ New. S:Old ←No/No→ New. W:Add. Z:Discontinued. F:Interchangeable by set. K:Q'ty Change

Copyright (C) YANMAR GLOBAL CS CO., LTD. All RightsReserved.

Fig.21. GASKET SET

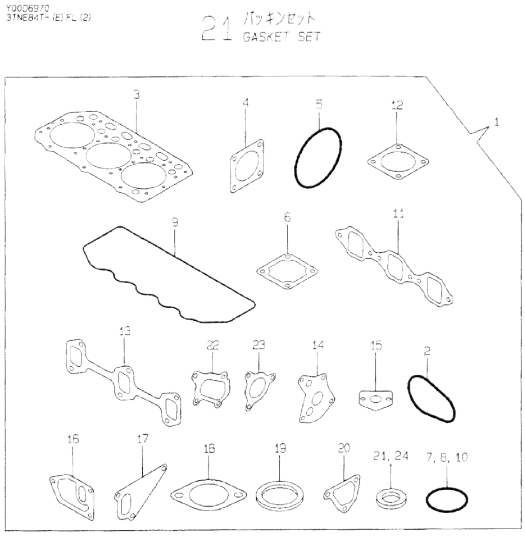

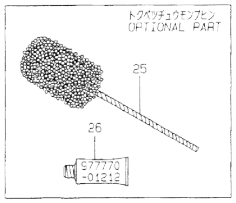

(A)=3TNE84T-FL
(B)=3TNE84T-FL2
(C)=3TNE84T-EFL2
(D)=
(E)=
(F)=

No.	Lev.	Parts No.	Description	Q'ty (A)	(B)	(C)	(D)	(E)	(F)	I	R
1	1	729012-92600	GASKET SET	1	1	1					1
2	2	129120-35110	GASKET	1	1	1					
3	2	129002-01331	GASKET, HEAD	1	1	1					
4	2	124240-01883	GASKET	1	1	1					
5	2	121850-51960	O-RING	1	1	1					
6	2	129150-77511	GASKET	1	1	1					
7	2	24341-000500	O-RING, 1AS50.0	1	1	1					
8	2	24311-000320	O-RING, 1AP32.0	2	2	2					
9	2	129150-11310	GASKET, BONNET	1	1	1					
10	2	24311-000120	O-RING, 1AP12.0	3	3	3					
11	2	129150-12111	GASKET, MANIFOLD	1	1	1					
12	2	129400-13201	GASKET, SILENCER	2	2	2					
13	2	129150-13110	GASKET	1	1	1					
14	2	129150-32020	GASKET, PUMP	1	1	1					
15	2	129150-35041	GASKET	1	1	1					
16	2	129120-35121	GASKET	1	1	1					
17	2	129100-42020	GASKET, WATER PUMP	1	1	1					
18	2	129795-49551	GASKET	1	1	1					
19	2	129150-49811	GASKET, THERMOSTAT	1	1	1					
20	2	129100-49840	GASKET	1	1	1					
21	2	124465-44950	GASKET, 16	2	2	2					
22	2	129403-18091	GASKET	1	1	1					
23	2	129477-18101	GASKET	1	1	1					
24	2	129150-49360	GASKET	1	1	1					
25	1	129400-92420	FLEX HORN	1	1	1					1
26	1	977770-01212	GASKET, LIQUID	1	1	1				W	1
	(A=EXXX)										

Remarks
(1) OPTIONAL PART.

N:Old ◄Yes/No► New. Q:Old ◄No/Yes► New, R:Old ◄Yes/Yes► New, S:Old ◄No/No► New. W:Add. Z:Discontinued. F:Interchangeable by set. K:Q'ty Change

Copyright (C) YANMAR GLOBAL CS CO., LTD. All RightsReserved.

Parts No. Index

Parts No.	Fig. No.	Ref. No.
101304-59020	17	15
101720-55750	17	27
102103-55520	17	22
103338-11190	4	27
103854-39140	17	14
104200-55321	17	2
		18
104200-55330	17	3
		19
104200-55341	17	20
104200-55750	17	10
		28
104200-59170	17	16
104207-44480	12	41
105010-39140	11	7
105425-01690	3	9
106500-44810	7	56
110250-55610	17	23
114250-53080	16	5
114250-53120	16	9
114250-53130	16	10
114250-53140	16	11
114250-53210	16	12
114250-53400	16	13
119131-18320	6	4 -1
119233-77931	15	77
119247-77100	20	35
119260-34810	10	18
119600-66840	15	82
119620-01750	3	3
119625-11870	4	45
119625-11880	4	46
119625-11900	4	47
119643-66900	20	36
119650-77910	20	37
119660-61491	14	32 -2
119660-61901	14	80
	15	57
119810-51040	13	10
119810-77340	20	32 -1
119820-77340	20	28
119836-77200	20	1
119836-77201	20	1 -1
119836-77700	20	2
119836-77710	20	4
119836-77721	20	5
119836-77730	20	6
119836-77741	20	7
119836-77750	20	8
119836-77760	20	9

Parts No.	Fig. No.	Ref. No.
119836-77770	20	10
119836-77780	20	11
119836-77790	20	15
119836-77800	20	16
119836-77810	20	19
119836-77820	20	20
119836-77830	20	21
119836-77840	20	17
119836-77850	20	3
119836-77860	20	18
119836-77871	20	12
119836-77880	20	13
119836-77890	20	14
119840-59560	16	48
119840-59570	16	49
120130-11860	4	12
121023-01550	2	24
121111-21501	9	12
121250-59550	16	47
121252-39450	11	9
121256-44600	12	50
121256-59072	17	32
121257-55720	17	24
121257-55731	17	25
121400-11340	4	28
121420-12511	5	15
121420-12530	5	17
121420-12540	5	18
121420-12550	5	19
121420-12561	5	20
121450-01560	2	6
121450-42450	12	38
121492-42290	12	14
121505-12210	5	23
121522-59080	17	33
121550-23200	9	30
121750-59110	17	35
121850-11860	4	16
121850-21680	9	11
121850-51960	2	14
	21	5
121855-12060	5	22
122117-51560	13	57
122710-51090	13	15
124064-55510	17	21
124066-59100	16	46
124160-01751	2	7
	4	67
124160-01910	1	5
124160-11360	4	61

Parts No.	Fig. No.	Ref. No.
124160-39140	11	8
124223-39900	11	10
124240-01871	2	9
124240-01883	2	10
	21	4
124323-59100	17	34
124450-44510	12	44
124450-44530	12	46
124450-44550	12	49
124450-44560	12	47
	17	39
124460-11340	4	29
124465-44950	12	39
	21	21
124550-21600	9	16
124550-51350	13	39
124550-51370	13	40
124550-59820	11	12
124550-59830	11	11
124550-66370	14	57
	15	59
124736-07900	4	63
124766-59050	16	44
	17	43
		46
124770-11770	12	22
124950-51190	13	24
128300-77920	20	40
129001-02930	1	23
129001-21000	9	1
129001-42001	12	1 -1
129001-42002	12	1 -2
129001-42003	12	1 -3
129001-42040	12	53
129001-91840	2	21 -1
129002-01331	1	31
	21	3
129002-22090	9	17
129002-22510	9	19
129002-22910	9	33
129002-22960	9	35
129012-13300	7	1
129012-13410	7	2
129012-33000	10	27
129012-39910	11	21
129012-49030	12	42 -1
129030-35300	10	39
129044-39610	11	16 -1
129052-55620	17	1
129052-61050	15	5

Parts No.	Fig. No.	Ref. No.
129052-61060	15	6
129052-61070	15	7
129052-61390	15	30
129052-61500	15	31
129052-61540	15	46
129100-01580	3	1
		17
	9	2
129100-01640	3	18
129100-01730	3	6
129100-01790	3	13
129100-11100	4	23
129100-11130	4	25
129100-11350	4	50
129100-23910	9	29
129100-25061	8	10
129100-42002	12	1
129100-42020	12	12
	21	17
129100-49050	12	36
129100-49800	12	21
129100-49820	12	24
129100-49830	12	25
129100-49840	12	30
	21	20
129100-52100	13	108
129100-55650	17	4
129100-55670	17	6
129100-55680	17	7
129100-55690	17	8
129100-55700	17	9
129100-59910	16	31
129100-59912	16	31 -1
129100-59920	16	35
129100-59922	16	35 -1
129100-59930	16	39
129100-59932	16	39 -1
129100-59951	16	51
129100-61400	14	18
	15	16
129100-61440	14	74
	15	75
129100-61650	14	52
	15	83
129100-61821	14	54
129100-61930	15	84
129100-77330	20	31 -1
129103-01530	2	5
129103-49301	12	18
129107-66810	18	6

Parts No. Index

Parts No.	Fig. No.	Ref. No.
129107-66820	18	7
129107-66830	18	3
129112-01770	3	8
129114-34810	10	31
129114-34820	10	59
129120-33040	10	28
129120-33051	10	29
129120-33060	10	30
129120-35001	10	32
129120-35110	10	36
	21	2
129120-35121	10	37
	21	16
129120-42350	12	35
129120-49030	12	42
129120-77501	5	4
129122-12060	5	8
129122-12100	5	1
129122-12211	5	12
129122-44480	2	13
	12	41 -1
129128-34800	10	17
129129-14580	8	3
129132-49050	12	36 -1
		36 -2
129135-12500	5	14
129135-12520	5	16
129135-35090	10	22
129136-34820	10	19
129136-66800	18	1
129136-66860	17	41
129136-66890	17	38
129136-77010	19	1
129136-77100	20	34
129136-77101	20	34 -1
129136-77210	19	20
129136-77220	19	21
129136-77250	20	29
129136-77251	20	29 -1
129136-77310	19	14
129136-77500	19	2
129137-01640	3	12
129137-18010	7	3
129139-12050	5	7
129139-12200	5	11
129139-13100	6	1
129139-39030	11	1
129139-39601	11	15
129139-39610	11	15 -1
129150-01200	1	30

Parts No.	Fig. No.	Ref. No.
129150-02020	1	7
129150-02450	8	4
129150-02870	1	35
129150-02930	1	26
129150-02940	1	32
129150-03020	4	53
129150-03070	4	54
129150-03080	4	55
129150-03100	2	12
129150-11230	4	41
129150-11280	4	36
129150-11290	4	37
129150-11310	4	58
	21	9
129150-11370	4	30
129150-11750	4	43
129150-11810	4	14
129150-12111	5	2
	21	11
129150-13110	6	2
	21	13
129150-14101	8	7
129150-14200	8	1
129150-14400	8	2
129150-21200	9	5
129150-23600	9	31
129150-23610	9	39
129150-25101	8	11
129150-25301	8	20
129150-25900	8	16
129150-25920	8	14
129150-25931	8	19
129150-32020	10	15
	21	14
129150-35041	10	21
	21	15
129150-35151	10	38
129150-35350	10	47
129150-49160	12	51
129150-49360	12	52
		60
	21	24
129150-49811	12	29
	21	19
129150-59120	16	26
129150-59130	16	29
129150-59131	16	29 -1
129150-59580	16	50
129150-77511	5	5
	21	6

Parts No.	Fig. No.	Ref. No.
129155-11241	4	33
129155-11260	4	34
129155-11270	4	35
129155-49800	12	28
129155-51020	13	9
129155-51050	13	12
129155-51060	13	13
129155-51140	13	21
129155-51180	13	23
129155-51200	13	25
129155-51270	13	32
129155-51280	13	33
	14	2
		2 -1
	15	2
129155-51320	13	37
129155-51340	13	38
129155-51370	13	41
129155-51380	13	42
129155-51390	13	43
129155-51400	13	44
129155-51410	13	45
129155-51420	13	46
129155-51450	13	47
129155-51500	13	52
129155-51521	13	53
129155-51530	13	54
129155-51540	13	55
129155-51550	13	56
129155-51570	13	59
129155-51580	13	60
129155-51591	13	61
129155-51600	13	62
129155-51700	13	81
129155-51710	13	82
129155-51750	13	83
129155-51760	13	84
129155-51790	13	85
129155-51930	13	87
129155-51940	13	88
129155-52050	13	107
129155-61050	14	5
129155-61060	14	6
129155-61070	14	7
129155-61120	14	8
	15	8
129155-61130	14	9
	15	9
129155-61140	14	10
	15	10

Parts No.	Fig. No.	Ref. No.
129155-61201	14	11
	15	11
129155-61341	14	15
	15	15
129155-61350	14	16
	15	80
129155-61360	14	17
	15	81
129155-61380	14	32 -1
129155-61430	14	21
	15	19
129155-61450	14	25
	15	23
129155-61460	14	26
	15	24
129155-61470	14	79
	15	79
129155-61480	14	27
	15	25
129155-61490	14	32
129155-61540	14	51
129155-61810	14	53
129155-61830	14	55
	15	56
129155-61950	14	56
	15	58
129156-51910	13	86
129175-01770	3	8 -1
129202-22300	9	23
129208-51060	13	14
129208-54500	13	99
129210-59030	17	42
129210-59130	16	43
	17	45
129211-59810	16	31 -2
129211-59820	16	35 -2
129211-59830	16	39 -2
129211-77920	20	41
129213-13510	6	8
129255-61802	14	75
129335-55700	17	17
129350-49530	12	19
		19 -2
129350-49560	12	19 -1
129400-13201	6	7
	21	12
129400-77011	19	1 -1
129400-77012	19	1 -2
129400-77400	19	2 -1
129400-77401	19	2 -2

Parts No. Index

Parts No.	Fig. No.	Ref. No.
129400-77440	19	5
129400-77441	19	5 -1
129400-77460	19	7
		9
129400-77470	19	8
129400-77490	19	10
129400-77510	19	11
129400-77520	19	13
129400-77530	19	14 -1
129400-77531	19	14 -2
129400-77570	19	18
129400-77571	19	18 -1
129400-77640	19	19
129400-92420	21	25
129403-18091	7	49
	21	22
129403-18720	7	4
129403-18750	7	5
129403-18770	7	6
129403-18780	7	15
129403-18800	7	24
129403-39610	11	16
129403-49050	12	43
129407-35300	10	39 -1
129410-77330	20	31
129411-55690	17	36
129418-18320	7	55 -1
129418-32000	10	1 -1
129470-11080	4	21
129470-11090	4	22
129470-51101	13	17
129477-18101	7	50
	21	23
129486-01670	3	21 -1
129486-42140	12	54 -1
129486-77400	19	2 -3
129486-77460	19	7 -1
		9 -1
129486-77470	19	8 -1
129486-77490	19	10 -1
129489-61700	14	76
	15	76
129500-61501	14	33
129503-53050	16	2
129505-51300	13	34
129506-51100	13	16
129553-32000	10	1
129553-39650	10	56
129556-42350	12	56
129566-66880	18	4

Parts No.	Fig. No.	Ref. No.
129566-66890	18	5
129612-77260	20	30 -1
129612-77700	20	22
129612-77710	20	23
129612-77730	20	25
129612-77740	20	26
129612-77750	20	27
129792-39410	10	50
129795-01780	3	20
129795-01800	2	4
129795-01950	2	11
129795-02411	1	29
129795-11120	4	24
129795-11180	4	26
129795-21661	9	10
129795-49551	12	20
	21	18
129900-77460	19	11 -1
129900-77640	19	19 -1
135210-61090	14	82
158552-61900	15	67 -1
171008-77410	19	3
		3 -2
171008-77420	19	4
		4 -2
171008-77450	19	6
171008-77510	19	12
171008-77540	19	15
171008-77650	19	20 -1
171008-77660	19	21 -1
171008-77670	19	22
171008-77720	19	26
171008-77730	19	27
171008-77740	19	28
171008-77750	19	31
171051-01921	1	6
171056-49351	12	59
171061-12800	5	21
171081-55910	17	29
171301-01640	3	9 -1
171340-21650	9	9
171350-03090	4	1
171350-21590	9	13
171353-44760	12	16
171440-01600	3	2
171440-44740	12	15
174307-51170	13	22
174307-51560	13	58
174307-51700	14	34
	15	32

Parts No.	Fig. No.	Ref. No.
194990-22050	6	6
		9
	7	51
		52
22117-040000	14	58
	15	60
22117-080000	18	8
22190-060002	14	71
		71 -1
22190-060003	14	71 -2
	15	61
22190-080002	2	23
	11	13
		23
		23 -1
22190-080003	11	13 -1
		23 -2
22190-100002	14	72
	15	62
22190-120002	14	73
	15	63
	16	59 -1
	17	16 -1
22190-160002	3	11
	13	97
22217-050000	13	98
22217-060000	13	89
22217-120000	8	17
	13	101
22252-000260	9	24
22272-000040	14	59
22272-000060	14	60
22287-120000	14	61
	15	64
22351-030010	10	57
22351-030016	14	62
22351-040010	9	8
22351-050010	13	90
22351-060012	4	31
22360-080000	18	9
22372-040000	14	63
	15	65
22451-060000	14	83
22512-070140	8	8
	9	6
23000-016000	12	37
23000-022000	11	17
	12	40
23000-041000	5	9
23000-060000	5	10

Parts No.	Fig. No.	Ref. No.
23061-070230	12	48
23414-080000	11	24
23414-100000	10	34
	11	14
23414-120000	16	59
23418-060000	17	30
23871-010000	1	10
23871-020000	4	16 -1
23871-030000	4	17
	12	11
		11 -1
		26
23876-010000	1	10 -1
23876-020000	4	16 -2
23876-030000	4	17 -1
	12	11 -2
23881-100002	10	35
23887-100002	14	64
	15	66
24101-063034	13	91
24311-000120	4	62
	21	10
24311-000160	2	15
	10	48
	17	11
24311-000320	2	8
	4	68
	21	8
24311-240100	10	20
	14	65
	17	12
		31
24314-000160	11	18
24321-000300	12	54
24321-000650	17	13
24341-000160	13	92
24341-000240	2	25
24341-000250	3	11 -1
24341-000280	15	67
24341-000500	4	59
	21	7
25132-003800	12	14 -1
		57
25132-003900	12	14 -2
26014-080252	7	54
	20	32
26014-080852	17	37
26022-050102	13	93
	14	66
26022-060162	13	94

Parts No. Index

Parts No.	Fig. No.	Ref. No.
26023-050102	14	67
26106-060102	14	81
	15	68
		69
26106-060122	2	26
26106-060142	15	70
26106-060162	2	26 -1
	11	19
26106-060202	14	68
	15	71
26106-060322	19	29
26106-060352	12	17
26106-060402	19	30
26106-080102	7	53
26106-080122	2	16
	11	20
	18	10
		11
26106-080142	4	6
	8	9 -1
26106-080162	2	17
	3	14
	4	60
	5	13
	8	9
	10	60
	11	22
	12	55 -1
26106-080182	12	55
26106-080202	2	18
	12	31
26106-080222	12	58
26106-080252	3	15
	4	48
	5	3
	10	49
		58
	12	32
26106-080302	3	21
26106-080352	3	22
	5	6
	10	26
26106-080452	2	19
	3	16
		16 -1
		16 -2
	8	15
26106-080502	3	23
		25
	4	49

Parts No.	Fig. No.	Ref. No.
26106-080502	12	33
	20	33
26106-080552	2	20
26106-080602	12	13
		34
26106-080802	6	3
26106-080852	2	21
26116-050102	18	12
26116-050302	13	95
26116-060162	12	27
26116-120252	19	32
26206-100252	3	4
26206-100302	3	5
26216-060202	4	18
26216-080222	6	4
	7	55
26216-080802	6	5
26226-080182	4	44
26366-060002	4	32
26366-080002	2	22
	6	6 -1
	14	78
	15	74
	20	30
26450-060252	10	16
26687-120002	14	77
	15	78
26716-060002	13	96
26716-120002	8	18
	13	102
26756-060002	14	69
	15	72
26776-120002	14	70
	15	73
27231-500000	1	11
27241-120000	1	12
27241-220000	4	19
27241-300000	1	13
27241-400000	4	20
27310-080001	4	27 -1
719810-01500	2	1
729012-01560	1	1
729012-51360	13	1
729012-92600	21	1
729202-11710	4	7
729215-51371	13	2
729215-51450	13	3
729402-11650	4	40
729402-23100	9	25
729503-53200	16	1

Parts No.	Fig. No.	Ref. No.
977770-01212	2	27
	3	24
	21	26
X2114255110	19	4 -1
X2114555500	19	26 -1
X2114955020	19	27 -1
X2130350900	19	3 -1
X2240410100	19	28 -1
XNB139815	7	32
XNB139825	7	20
XNB139826	7	27
XNB139827	7	35

Parts No.	Fig. No.	Ref. No.